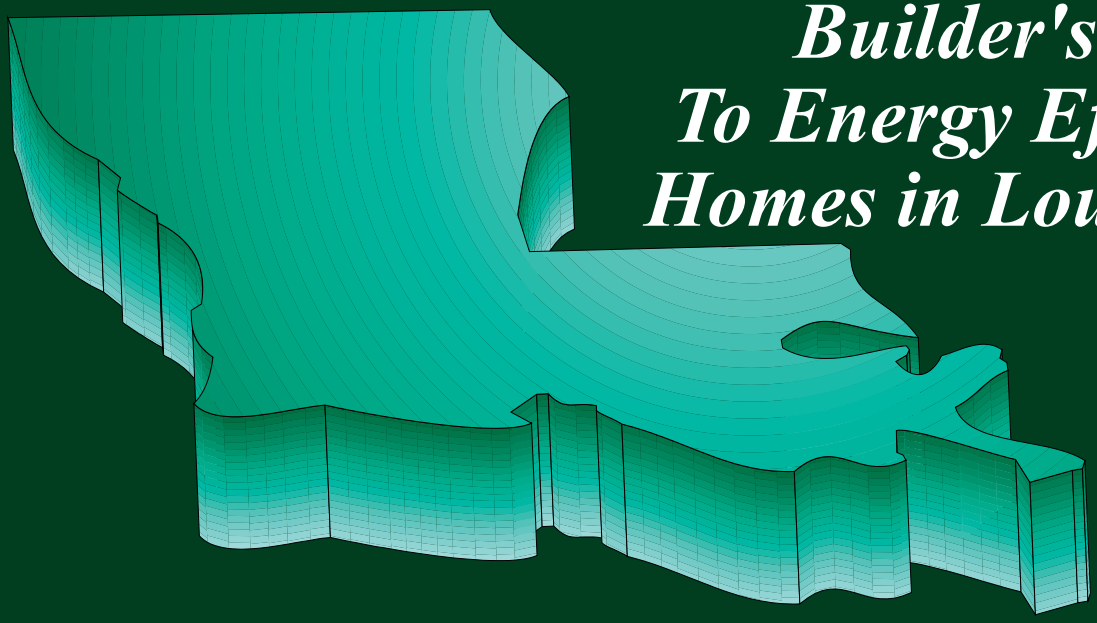

Builder's Guide To Energy Efficient Homes in Louisiana

Louisiana Department of Natural Resources

October, 2002

Builder's Guide to Energy Efficient Homes in Louisiana

funded by

Louisiana Department of Natural Resources

Technology Assessment Division

Energy Section

Jack C. Caldwell, Secretary
T. Michael French, Director
Paula Ridgeway, Manager

contracted to

Southface Energy Institute

Principal Investigator
Jeffrey S. Tiller

Principal Authors
Jeffrey S. Tiller, Southface Energy Institute
Dennis B. Creech, Southface Energy Institute
Program Manager
Harvey Landry, Louisiana Department of Natural Resources

Technical Review
Wade Byrd, Louisiana Department of Natural Resources
Buddy Justice, Louisiana Department of Natural Resources
David McGee, Louisiana Department of Natural Resources
Ernie Singleton, Louisiana Department of Natural Resources

Graphics and Layout
Mary Beth McKee, Southface Energy Institute
Scott Suddreth, Southface Energy Institute
Greg Brough, Southface Energy Institute

Revised and Edited 2002
Originally Published 1999

Contact
For information on any of the energy services mentioned in this guide, please contact
Technology Assessment Division, Energy Section:
Main number: 225-342-1399 Toll-free: 1-800-836-9589 Fax: 225-342-1397
E-mail: energy@dnr.state.la.us Web Site: http://www.dnr.state.la.us/energy

Revision of the Builder's Guide to Energy Efficient Homes in Louisiana is funded 100% from the Petroleum Violation Escrow (PVE) funds from the Exxon Settlement as provided by the Louisiana Department of Natural Resources and approved by the U.S. Department of Energy.

This public document was published at a total cost of $13, 175.00. Ten thousand copies of this document were published in this third printing at a cost of $13, 175.00. The total cost of printings of this document, including reprints, is $25, 875.00. This document was published by the Department of Natural Resources, Technology Assessment Division, Energy Section, P.O. Box 44156, Baton Rouge, Louisiana 70804-4156, to promulgate the State Energy Conservation Plan developed under P.L. 94-163. This material was printed in accordance with standards for printing by state agencies established pursuant to R.S. 43:31.

Louisiana Department of Natural Resources

Energy Rated Homes™ OF LOUISIANA
La. Dept. of Natural Resources

Table of Contents

1. Step-by-Step Energy Efficient Construction 1

Energy Efficient Homes: The Key Features 2
Sample Building Sections - Crawlspace Home 3
Sample Building Sections - Two-Story with Conditioned Basement 4
Sample Building Sections - Slab-On-Grade 5
Site Planning 6
Footing and Foundation Wall 7
Foundation Alternatives 8
Crawlspace or Unconditioned Basement 9
Floor — Conditioned Basement 10
Insulated Floor 11
Wall Framing 12
Wall and Ceiling Detailing 13
Seal Holes and Penetrations 14
HVAC Systems 15
Ductwork 16

2. Energy Efficient Packages 19

Achieving Efficiency 19
The Model Energy Code 21
Evaluating Energy Efficient Products 22
Mortgage Rate Tables 23
Home Energy Packages 26
Energy 1 Package -- 5-Star Home 28
Window and Door 28
Natural Cooling 28
Heating and Cooling 29
Domestic Hot Water 29
Appliances and Lighting 29
Framing Details 29
Energy 2 Package -- 5-Star Plus Home 30
Envelope 30
Window and Door 30
Air Tight / Ventilate Right 30
Natural Cooling 30
Heating and Cooling 31
Domestic Hot Water 31
Appliances and Lighting 31
Framing Detailing 31
Passive Solar Design 32

3. The House As A System 33

Health and Comfort 33
Heat Flows in Homes 34
Conduction 34
Convection 34
Radiation 34

Air Leaks and Indoor Air Quality 35
How Condensation Occurs 35
Winter Condensation in Walls 36
Summer Condensation in Walls 36
Affect of Relative Humidity 37
Systems in a Home 37
Structural System 37
Structural Recommendations 37
Moisture Control System 38
Bulk Moisture Transport 38
Capillary Action 39
Air Transport 39
Vapor Diffusion 41
Air Barrier System 41
Thermal Insulation System 42
Comfort Control System 42
Creating Boundaries 43

***4. Air Leakage Sealing - Materials and Techniques* 47**
Air Leakage Driving Forces 48
Seal Penetrations and Bypasses 50
Airtight Drywall Approach 54
ADA Advantages 55
ADA Disadvantages 55
ADA Installation Techniques 56
Wood Framed Floors 56
Slab Floors 56
Windows and Doors 56
Exterior Framed Walls 56
Partition Walls 56
Ceiling 56
Housewrap Air Barriers 57
Housewrap Advantages 57
Housewrap Disadvantages 57
Foam Sheathing Barrier 59

***5. Insulation Materials and Techniques* 61**
Insulation Materials 61
Insulation Strategies 62
Foam Insulation Strategies 62
Critical Guidelines 64
Foundation Insulation 64
Slab-on-Grade Insulation 64
Termite Problems in Slab Insulation 64
Foundation Wall Insulation 66
Insulating Concrete Block Cores 66
Interior Foam Wall Insulation 66
Interior Framed Wall 66
Lightweight Concrete Products 67
Insulated Concrete Form (ICF) Wall Systems 67
Framed Floor Insulation 70

Insulating Under Floors 70
Insulating Crawlspace Walls 71
Crawlspace Wall Insulation Requirements: 71
Advantages of Crawlspace Wall Insulation 72
Disadvantages of Crawlspace Wall Insulation 72
Wall Construction 73
Wall Framing with O.V.E. 73
2 x 4 Wall Insulation 73
Avoid Side Stapling 76
Blown Loose-fill Insulation 76
Blown Foam Insulation 77
Structural Insulated Panels 77
Metal Framing 77
Wall Sheathings 78
2x6 Wall Construction 80
Ceilings and Roofs 82
Attic Ventilation 82
Unvented Attics 82
Vent Selection 82
Guidelines for Attic/Roof Ventilation 82
Powered Attic Ventilator Problems 83
Attic Floor Insulation Techniques 83
Steps for Installing Loose-fill Attic Insulation: 83
Steps for Installing Batt Insulation 85
Increasing the Roof Height at the Eave 86
Problems with Recessed Lights 86
Cathedral Ceiling Insulation Techniques 87
Building R-30 Cathedral Ceilings 87
Scissor Trusses 88
Ceilings with Exposed Rafters 88
Radiant Heat Barriers 89

***6. Windows and Doors* 91**
Windows 92
Goals of Efficient Windows 92
Thermal Breaks and Window Spacers 94
Caution about Window Insulating Values 96
Future Window Options 97
Electronic Windows 97
Solid Windows 97
Doors 98
Accessible Design 98
Overall Window and Door Recommendations 98

***7. Heating, Ventilation, Air Conditioning (HVAC)* 99**
Types of HVAC Systems 99
Sizing 100
Temperature Controls 102
Zoned HVAC Systems 103
Air Conditioning Equipment 104
The SEER Rating 104

Variable Speed Units *104*
Proper Installation *104*
Heating Systems *107*
CLC *107*
Air-source Heat Pumps *107*
Geothermal Heat Pumps *108*
Measures of Efficiency for Heat Pumps *109*
Furnace Equipment *109*
Furnace Operation *109*
Measures of Efficiency for Furnaces *110*
Integrated Space and Water Heating *111*
Gas-fired Integrated Systems *111*
Electric Integrated Systems *111*
Wood Heating *112*
Unvented Fuel-Fired Heaters *113*
Ventilation and Indoor Air Quality *113*
Supplying Outside Make-up Air *115*
Dehumidification Ventilation Systems *115*
Heat Recovery Ventilators *115*
Design 1: Upgraded Spot Ventilation *116*
Design 2: Whole House Ventilation System *116*
Design 3: Heat Recovery Ventilation (HRV) System *116*

8. Duct Design and Sealing* *117
Duct Leaks and Air Leakage *117*
Sealing Air Distribution Systems *119*
High Priority Leaks *120*
Moderate Priority Leaks *120*
Low Priority Leaks *120*
Duct Design *123*
Duct Materials *123*
Sizing and Layout *123*

9. Water Heating, Appliances and Lighting* *127
Selecting an Efficient Water Heater *128*
Gas Water Heaters *128*
Electric Water Heaters *129*
Heat Recovery Units *129*
Heat Pump Water Heaters *129*
Solar Water Heaters *130*
Instantaneous Water Heaters *131*
Energy Efficient Appliances *132*
EnergyGuide Label *133*
Appliance Shopping Checklist *133*
All Appliances *133*
Refrigerators *133*
Dishwashers *133*
Clothes Washing Machines *134*
Clothes Dryers *134*
Cooking *134*
Lighting *134*

10. Passive Solar Homes — Designs for Today 139
Basic Design Guidelines 139
Passive Solar Components 141
Passive Solar Windows 141
Thermal Storage Mass 142
Guideline 1: Locate the thermal mass in direct sunlight 143
Guideline 2: Distribute the thermal mass 143
Guideline 3: Do not cover the thermal mass 143
Guideline 4: Select an appropriate mass color 143
Guideline 5: Insulate the thermal mass surfaces on the outside 143
Guideline 6: Make thermal mass multipurpose. 144
Thermal Mass Patterns 144
Heat Distribution 146
Estimating Passive Solar Savings 146
Summary 147

11. Natural Cooling 149
Window Shading Options 149
Landscaping and Trees 150
Overhangs 151
External Shades and Shutters 152
Interior Shades and Shutters 152
Reflective Films and Tints 153
Natural Ventilation 154
Mechanical Ventilation 155
Radiant Heat Barriers 156
Reflective Roof Coatings 157
Moisture Control 158
Central Dehumidification Systems 158
Desiccant Cooling Systems 158
Alternative Cooling Options 159

12. Fingertip Facts 161
Abbreviations 161
Energy and Fuel Data 161
Energy Units 161
Power Units 161
Fuel Units 161
Average Daily Solar Radiation 161
Insulating Values 162
HVAC Equipment Efficiencies 162
Climatic Data for Louisiana 162
Average Monthly Temperatures 163
Comparative Climatic Data 163

Table of Figures

Chapter One: Step-by-Step Energy Efficient Construction
Figure 1-1 Sample Building Sections - Crawlspace Home 3
Figure 1-2 Sample Building Sections - Two-Story with Conditioned Basement 4
Figure 1-3 Sample Building Sections - Slab-On-Grade 5
Figure 1-4 Site Planning 6
Figure 1-5 Footing and Foundation Wall 7
Figure 1-6 Foundation Alternatives 8
Figure 1-7 Crawlspace or Unconditioned Basement 9
Figure 1-8 Interior Framed, Insulated Wall 10
Figure 1-9 Insulated Floor 11
Figure 1-10 Wall Framing 12
Figure 1-11 Wall and Ceiling Detailing 13
Figure 1-12 Sealing Holes and Penetrations 14
Figure 1-13 HVAC Systems 15
Figure 1-14 Duct Testing Fan Setup 16
Figure 1-15 Prevent Pressure Imbalances 16
Figure 1-16 Sealing Flex Duct Take-offs 16

Chapter Two: Energy Efficient Packages
Figure 2-1 Five Star Home 28
Figure 2-2 Framing Details 29
Figure 2-3 Five Star Plus Home 30
Figure 2-4 Framing Details 31
Figure 2-5 Passive Solar Design 32

Chapter Three: The House As A System
Figure 3-1 How Heat Moves 34
Figure 3-2 Air Quality Problems from "Fresh" Air 35
Figure 3-3 Conditions for Condensation 35
Figure 3-4 Psychometric Chart 36
Figure 3-5 Winter Dewpoint Temperature Inside Walls 36
Figure 3-6 Summer Dewpoint Temperature Inside Walls 36
Figure 3-7 Relative Humidity Ranges 37
Figure 3-8 Bulk Moisture Transport 38
Figure 3-9 Drainage Plane 38
Figure 3-10 Capillary Action 39
Figure 3-11 Typical Water Vapor Transport 39
Figure 3-12 Bulk Moisture Transport 40
Figure 3-13 Capillary Action 40
Figure 3-14 Air Transport 40
Figure 3-15 Vapor Diffusion 40
Figure 3-16 Drying to the Interior 41
Figure 3-17 Air Barrier System Requirements 42
Figure 3-18 Residential Boundaries 43
Figure 3-19 Balanced Air Distribution 44
Figure 3-20 Air Leaks in Supply Ducts 44

Figure 3-21 Air Leaks in Return System 44
Figure 3-22 Return Blocked by Door 44
Figure 3-23 Wall Moisture 45
Figure 3-24 Carbon Monoxide Disaster 46

Chapter Four: Air Leakage Sealing -- Materials and Techniques
Figure 4-1 Creating a Pressure Boundary 47
Figure 4-2 Wind Driven Infiltration 48
Figure 4-3 The Stack Effect 48
Figure 4-4 Mechanical System Driven Infiltration 48
Figure 4-5 Blower Door 49
Figure 4-6 Home Blower Door Test 49
Figure 4-7 Air Leakage Through Bypass 50
Figure 4-8 Typical Home Air Leakage Sites 51
Figure 4-9 Sealing Bypasses 52
Figure 4-10 Sealing More Bypasses 53
Figure 4-11 Airtight Drywall Approach Air Barrier 54
Figure 4-12 Creating an Air Barrier Between Floors 55
Figure 4-13 Housewrap-Window Connection 57
Figure 4-14 Sealing Seams in Housewrap 57
Figure 4-15 Recommended Housewrap Installation Process 58
Figure 4-16 Sealing Sheathing as Exterior Air Barrier 59

Chapter Five: Insulation Materials and Techniques
Figure 5-1 Insulating the Building Envelope 61
Figure 5-2 Possible Monolithic Slab Details 65
Figure 5-3 Possible In-Fill Slab Details 65
Figure 5-4 Insulating Concrete Block Cores 66
Figure 5-5 Interior Foam Wall Insulation 66
Figure 5-6 Interior Framed Wall 66
Figure 5-7 Lightweight Concrete Products 67
Figure 5-8 Insulated Concrete Form Wall Systems 67
Figure 5-9 Relative Humidity (RH) and Foundation Vents 69
Figure 5-10 Insulated Wood Framed Floors 70
Figure 5-11 Insulated Floor Over Pier Foundation 70
Figure 5-12 Insulated Crawlspace Walls 71
Figure 5-13 Floor Insulation Details 72
Figure 5-14 Optimum Value Engineering (O.V.E.) Details 74
Figure 5-15 Standard Framing versus O.V.E. Framing 75
Figure 5-16 Insulating Walls With Batts 76
Figure 5-17 Blown Sidewall Insulation Options 76
Figure 5-18 Blown Foam Insulation 77
Figure 5-19 Structural Insulated Panels (SIP) 77
Figure 5-20 Foam Sheathing Keeps Walls Warmer 78
Figure 5-21 Structural Insulated Panels Construction 79
Figure 5-22 Let-In Bracing 80
Figure 5-23 Average Wall R-Value 81
Figure 5-24 Ridge and Soffit Vents 82
Figure 5-25 Pressure Problems Due to Powered Attic Ventilators 83
Figure 5-26 Attic Blocking Requirements 84

Figure 5-27 Full Width Batts 85
Figure 5-28 Insulating Under Attic Floors 85
Figure 5-29 Insulation Options for Eaves 86
Figure 5-30 Choose Quality Recessed Lamps 87
Figure 5-31 Cathedral Ceiling Insulation Options 88
Figure 5-32 Cathedral Ceiling - Exterior Roof Insulation 89

Chapter Six: Windows and Doors
Figure 6-1 Window Anatomy 91
Figure 6-2 Winter Heat Loss in a Typical Clear Double-glazed Window 92
Figure 6-3 Summer Heat Gain in a Typical Double-glazed Window 92
Figure 6-4 Types of Windows 93
Figure 6-5 Metal Window Frame With Thermal Break 94
Figure 6-6 Low-e, Gas-Filled Windows 95
Figure 6-7 NFRC Label 96
Figure 6-8 Inside Window Temperatures in Cold Weather 96
Figure 6-9 Insulated Metal Door 98

Chapter Seven: Heating, Ventilation, Air Conditioning (HVAC)
Figure 7-1 Components of Forced-air Systems 99
Figure 7-2 Automatic Zoned System 103
Figure 7–3 Types of Heat Pumps 107
Figure 7-4 Sealed Mechanical Room Design 109
Figure 7-5 Integrated Space and Water Heating System 111
Figure 7-6 Efficient Wood Heater Design 112
Figure 7-7 Unvented and Direct Vent Heaters 113
Figure 7-8 Ventilation with Spot Fans 114
Figure 7-9 In-Line Ventilation Fans 114
Figure 7-10 Sample Ventilation Plans 116

Chapter Eight: Duct Design and Sealing
Figure 8-1 Efficiency Losses Due to Attic Return and Supply Leaks 118
Figure 8-2 Duct Test on Return Grille 119
Figure 8-3 Sealing Flex-duct Collar with Mastic 120
Figure 8-4 Disconnected Ducts Are High Priorities 121
Figure 8-5 Duct Leaks in Inside Spaces 121
Figure 8-6 Seal All Leaks in Air Handling Unit 121
Figure 8-7 Shelf-Mounted Systems Without Returns 122
Figure 8-8 Seal All Leaky Takeoffs 122
Figure 8-9 Sealing Leaky Boots 122
Figure 8-10 Types of Ductwork 123
Figure 8-11 Comparison of Air Flow in Different 6-inch Ducts 124
Figure 8-12 Duct Design Using Manual D 126

Chapter Nine: Water Heating, Appliances and Lighting
Figure 9-1 Water Use in Typical Homes 127
Figure 9-2 Insulating Jackets for Electric and Gas Water Heaters 128
Figure 9-3 Heat Pump Water Heaters 129
Figure 9-4 Active Solar Water Heating Systems 130

Figure 9-5 Batch Solar Water Heating System 131
Figure 9-6 Instantaneous Water Heater 131
Figure 9-7 EnergyGuide Label 132
Figure 9-8 Energy Efficiencies of Light 135

Chapter Ten: Passive Solar Homes - Designs for Today
Figure 10-1 Passive Solar Room Planning 140
Figure 10-2 Basic Passive Solar Designs 141
Figure 10-3 Spread Out Thermal Mass Surface 143
Figure 10-4 Use Floor Coverings Wisely 143
Figure 10-5 Thermal Mass Patterns 145

Chapter Eleven: Natural Cooling
Figure 11-1 Composition of Solar Gain into Home 149
Figure 11-2 Landscaping Guidelines 150
Figure 11-3 Guidelines for Overhangs 150
Figure 11-4 Overhang Design Strategies 150
Figure 11-5 Interior Shading and Shutters 152
Figure 11-6 Reflective Window Film 153
Figure 11-7 Natural Ventilation Design Strategies 154
Figure 11-8 The Stack Effect 154
Figure 11-9 Whole House Fans in Leaky Homes 156
Figure 11-10 Radiant Heat Barrier 156
Figure 11-11 Central Dehumidification System 158
Figure 11-12 Desiccant Wheel Dehumidifier 159

Table of Tables

Chapter One: Step-by-Step Energy Efficient Construction
Table 1-1 Economic Analysis of Energy Efficient Packages 1

Chapter Two: Energy Efficient Packages
Table 2-1 Estimated Extra Costs of Five-Star Homes 20
Table 2-2 Savings for a Five-Star Home 20
Table 2-3 Minimum Designs that Meet the Model Energy Code 21
Table 2-4 Rate of Return for Energy Investments (%) 23
Table 2-5 Mortgage Rate Table 1 24-25
Table 2-6 Economic Analysis of Energy Efficient Packages 26
Table 2-7 Energy Efficient Home Packages 27
Table 2-8 Sizing South Window Area for Passive Solar Homes 32

Chapter Three: The House As A System
Table 3-1 Contributors to Heating and Cooling Bills in a Typical Home 34
Table 3-2 Perm Ratings of Different Materials 41

Chapter Four: Air Leakage Sealing - Materials and Techniques
Table 4-1 Typical Infiltration Rates 49
Table 4-2 Leaks and Sealants 50

Chapter Five: Insulation Materials and Techniques
Table 5-1 Fiberglass Batt Insulation Characteristics 62
Table 5-2 Comparison of Insulation Materials 63
Table 5-3 Cost Comparison of Insulating Materials 64
Table 5-4 Economics of Framed Floor Insulation 70
Table 5-5 2x4 Framed Wall Problems and Solutions 73
Table 5-6 Effective Steel Wall R-values 78
Table 5-7 Sheathing Costs 80
Table 5-8 Economics of Wall Insulation 81
Table 5-9 Typical Attic Insulation Costs ($/sq ft) 83
Table 5-10 Typical Blowing Chart for Loose-Fill Insulation 85
Table 5-11 Economics of Attic Insulation 87
Table 5-12 Economics of Cathedral Ceiling Insulation 89

Chapter Six: Windows and Doors
Table 6-1 Cost Comparison of Window Alternatives 94
Table 6-2 Sample Window Performance Characteristics 95
Table 6-3 Economics of Energy Conserving Windows and Doors 97

Chapter Seven: Heating, Ventilation, Air Conditioning (HVAC)
Table 7-1 Equipment Sizing and Cost Comparison 100
Table 7-2 Sample Cooling System A Data 102
Table 7-3 Sample Cooling System B Data 102
Table 7-4 Typical Savings from Programmable Thermostats 103
Table 7-5 Air Conditioner Economics 106

Table 7-6 Economic Analysis of Heat Pumps 108
Table 7-7 Economic Analysis of Gas Furnaces 110
Table 7-8 Typical Wood Heating Savings ($/year) 112

Chapter Eight: Duct Design and Sealing
Table 8-1 Checking System Air Flow 125

Chapter Nine: Water Heating, Appliances and Lighting
Table 9-1 Energy Factors for High Efficiency Water Heaters 128
Table 9-2 Typical Energy Costs for Appliances 132
Table 9-3 Fluorescent Lighting Guidelines 135
Table 9-4 Sample Improved Lighting Design for Homes 136
Table 9-5 Purchase and Operating Costs of Different Lighting Products 137

Chapter Ten: Passive Solar Homes - Designs for Today
Table 10–1 Energy Bills in Direct Gain Homes 142
Table 10-2 Energy Bills in Homes with Sunspaces 142
Table 10-3 Heating Bills as a Function of Thermal Mass 144
Table 10-4 South Window Area for Passive Solar Homes 147
Table 10-5 Passive Solar Window Energy Savings Multiplier 148
Table 10-6 Typical Delivered Cost of Energy for Baton Rouge 148

Chapter Eleven: Natural Cooling
Table 11-1 Economic Analysis of Shading Measures 151
Table 11-2 Shading Design Strategies 153
Table 11-3 Solar Heat Gain Coefficients for Window Coverings 153
Table 11-4 Sizing Rules for Ceiling Fans 155
Table 11-5 Comparative Power and Operating Costs of Cooling Equipment 155
Table 11-6 Sizing Rules for Whole House Fans 155
Table 11-7 Radiant Heat Barrier (RHB) Performance 157

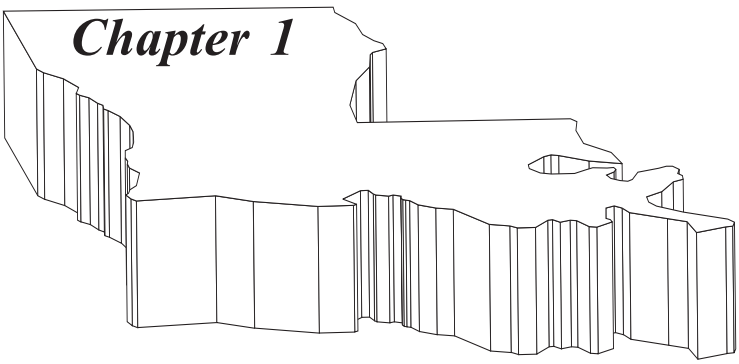

Step-by-Step Energy Efficient Construction

Chapter 1 is a quick reference guide that shows the key elements of energy efficient construction. The energy features save money, improve indoor air quality, enhance comfort, prevent moisture problems, and increase the long term durability of the building. The features shown in the following pages are described in detail in the other chapters.

To ensure a successful home, follow the concepts introduced in Chapter 3. The features must be included in the plans and specifications for the home and described thoroughly to the subcontractor responsible for their installation. Too often, an excellent plan falls short of expectations because of inadequate attention to the details.

The positive economic return is an important benefit of the measures shown in this series of chapters. The energy savings exceed the additional annual mortgage costs of the measures. Thus, the payback period, even when considering the additional payment for the measures, is typically within one or two years.

Table 1-1 is from Chapter 2 on energy packages. The 5-Star Home package is a set of energy measures that exceeds the Model Energy Code and provides an excellent return on investment. Five-Star Energy Plus goes well beyond the Model Energy Code, but still provides an excellent return. The Five-Star Home Energy Rating may allow for preferential focus from financial institutions. Contact the Louisiana Department of Natural Resources for information on Home Energy Ratings. (800-836-9589 in Louisiana, or 342-1399 in Baton Rouge) [on-line at www.dnr.state.la.us/energy].

Table 1-1
Economic Analysis of Energy Efficient Packages*

	Annual Energy Costs ($)			
	Code Home	Five-Star Home	Five-Star Plus	Passive Solar Home**
Heating	444	224	113	135
Cooling	563	290	183	320
Hot Water	396	366	171	220
Lighting	84	56	42	56
Other (Appliances; Service Charges)	356	321	289	321
Total	**1,843**	**1,258**	**798**	**1,052**
Annual Energy Savings		**585[1]**	**1,045[1]**	**791[1]**
Typical Additional Construction Costs		**2,466[1]**	**5,635[1]**	**5,466[1]**
Extra Mortgage ($/yr) (8% loan for 30 years)		**217[1]**	**496[1]**	**481[1]**
Payback Period (years)		**4.2**	**5.4**	**6.9**
Estimated Rate of Return (IRR)		**53%[1]**	**42%[1]**	**29%[1]**

* For a two-story, 2,000 square-foot home in Baton Rouge
** Includes extra cost of 5-Star Home features, additional south-facing glass, and thermal mass
[1] Compared to Code Home

ENERGY EFFICIENT HOMES: THE KEY FEATURES

Moisture barrier system — drain water away from foundation; install capillary breaks and 6-mil polyethylene ground cover; make interior finish airtight; follow careful flashing details for roof, around windows and doors, and other roof and wall penetrations through which wind-driven rain may leak

Air barrier system — eliminate leakage between conditioned and unconditioned spaces, in particular between living areas and crawlspaces, unheated basements, attics, and garages.

Continuous insulation system — install insulation as continuously as possible between conditioned and unconditioned spaces.

- ❒ Exterior walls, floors over unconditioned or exterior spaces, ceilings below unconditioned or exterior spaces (including attic access covers).
- ❒ Wall areas adjacent to attic spaces or basement spaces — such as knee walls, attic stairways, and high interior walls with attic or exterior space behind.
- ❒ Wall areas between conditioned and unconditioned spaces — such as band joists, garage walls, basement stairways, and mechanical room walls.

Select and install energy efficient windows

- ❒ Design home with minimal east and west glass area, locate additional glass area on south side for passive heating in winter months, consider passive solar designs to further reduce heating needs.
- ❒ Use double-glazed windows with U-values under 0.65 (R-values of at least 1.54).
- ❒ Consider low-emissivity coatings and other high performance features.
- ❒ Shade windows in summertime with overhangs or glazing treatments.

Design heating and cooling system for efficiency

- ❒ Size and properly install high efficiency equipment designed for local climate.
- ❒ Eliminate potential for backdrafting of combustion appliances.
- ❒ Install fresh air ventilation systems to bring in outside air when needed.

Seal ductwork

- ❒ Locate ductwork in conditioned spaces.
- ❒ Size and lay out ductwork to supply proper airflow; measure airflow to guarantee comfort.
- ❒ Seal all duct leaks, except those in removable components, with mastic or mastic plus fiber mesh; seal leaks around removable components with UL-181 A or B foil-backed duct tape.

Minimize hot water costs

- ❒ Select efficient equipment, use heat traps to prevent convective loops, install water heater wraps.
- ❒ Use water-conserving fixtures and appliances.

Choose energy efficient appliances and lighting

- ❒ Install fluorescent or compact fluorescent fixtures, if on over 4 hours per day.
- ❒ Use recessed lights selectively and choose only airtight, IC (insulation contact)-rated lamps.
- ❒ Choose high-pressure sodium or metal halide lamps for exterior lighting with daylight sensors if used for security lighting.

SAMPLE BUILDING SECTIONS - CRAWLSPACE HOME

Figure 1-1
Sample Building Sections - Crawlspace Home

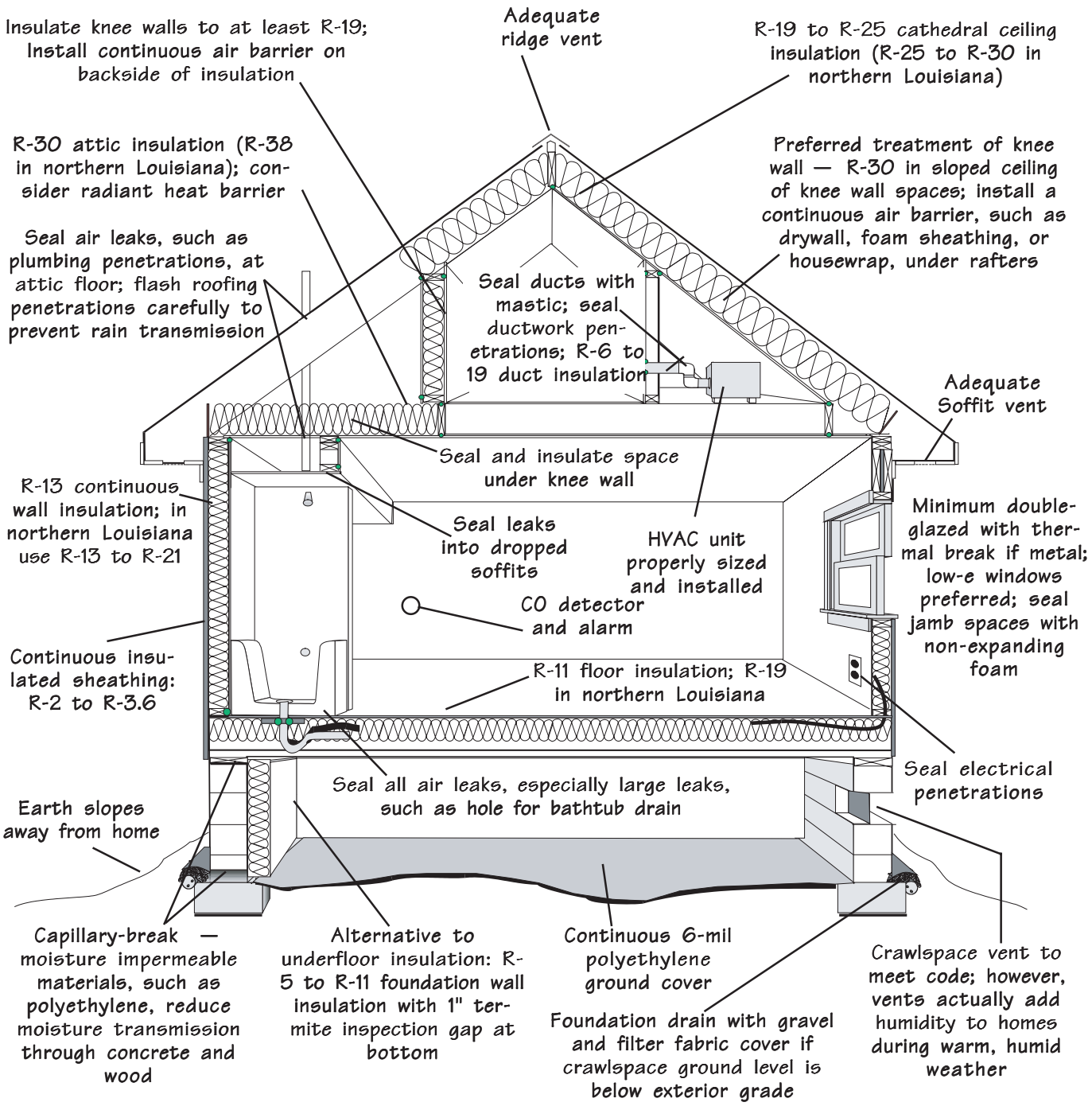

SAMPLE BUILDING SECTIONS - TWO-STORY WITH CONDITIONED BASEMENT

Figure 1-2
Sample Building Sections - Two-Story with Conditioned Basement

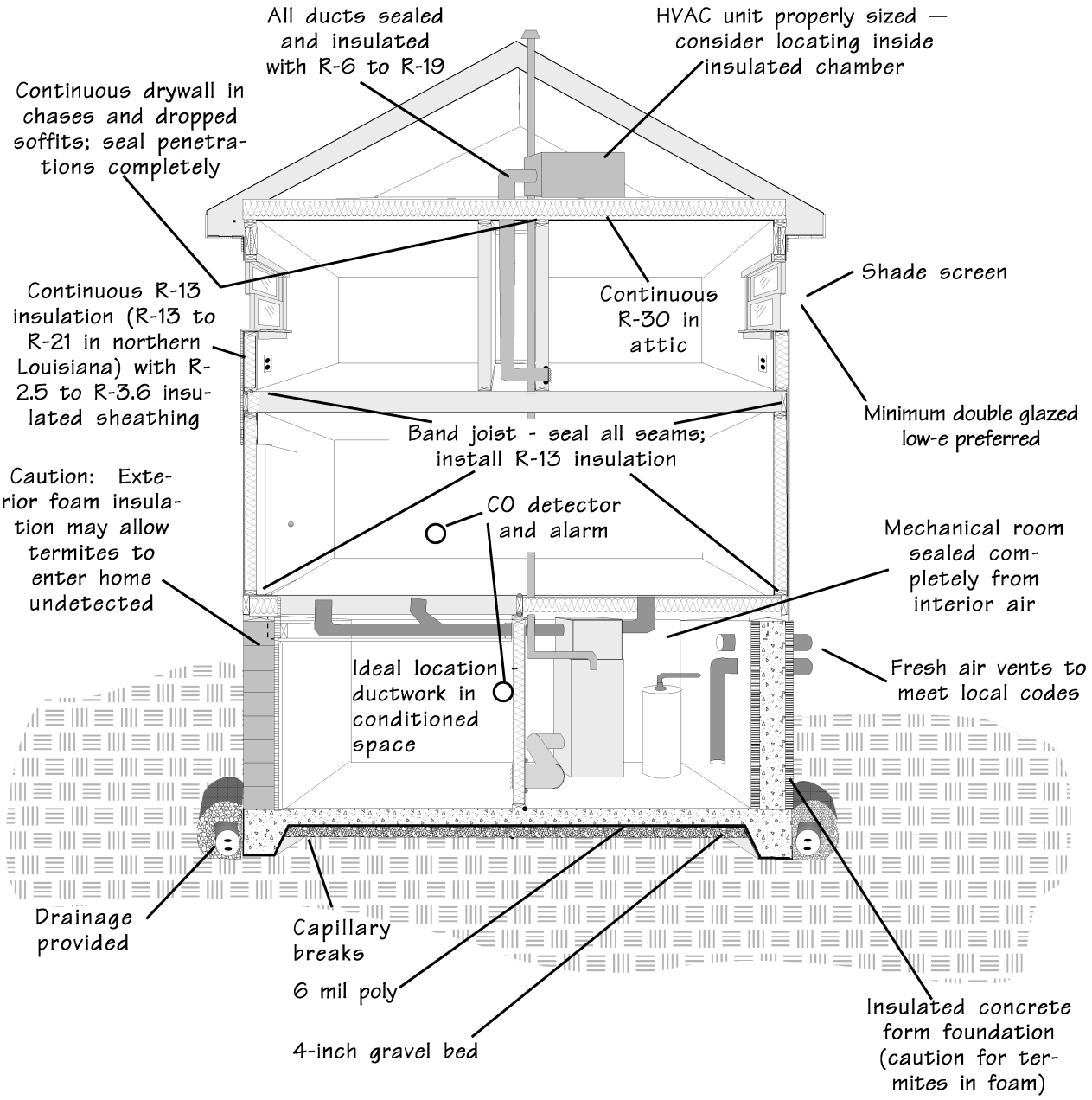

SAMPLE BUILDING SECTIONS - SLAB-ON-GRADE

Figure 1-3
Sample Building Sections - Slab-On-Grade

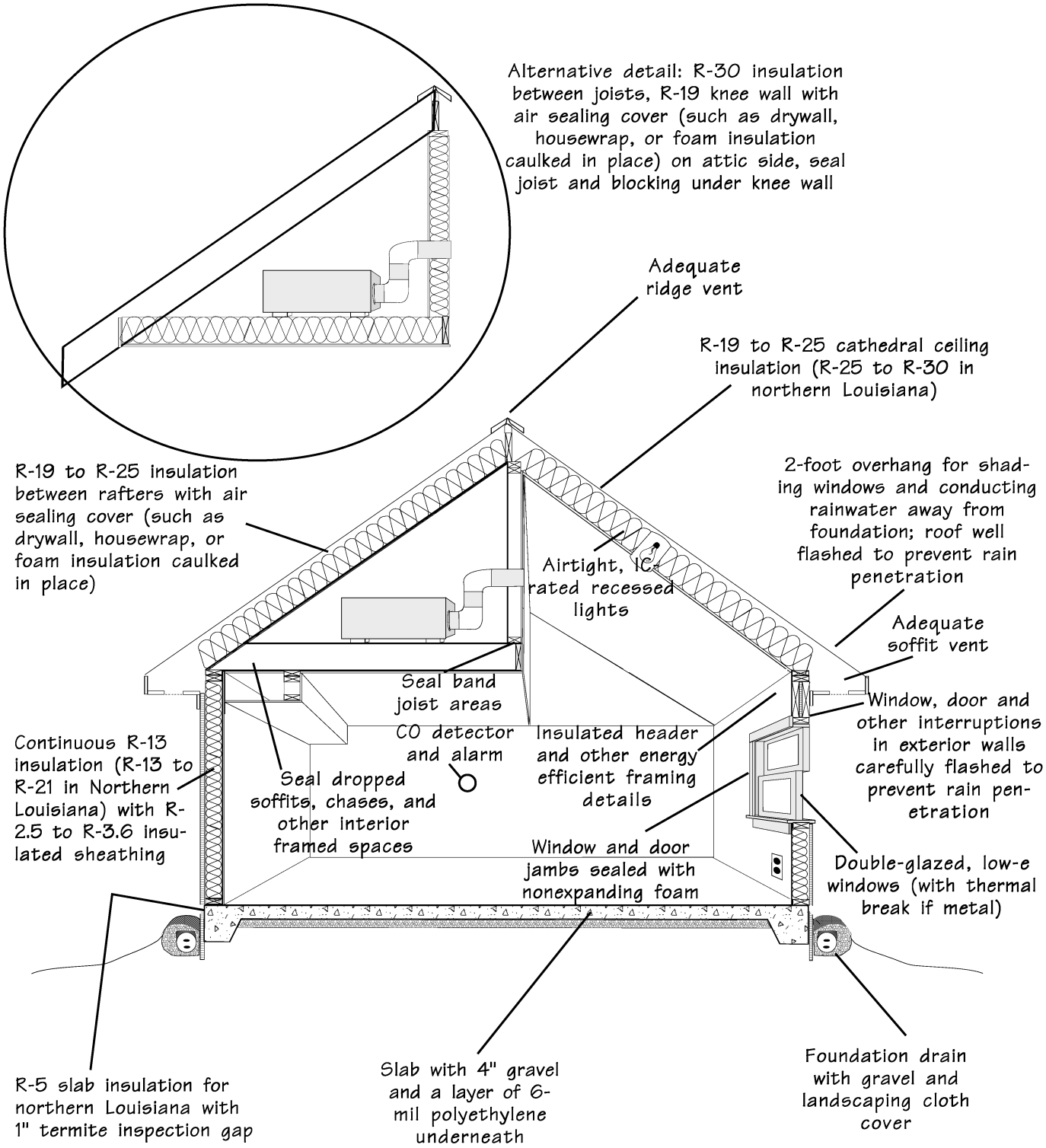

1. Site Planning

Figure 1-4
Site Planning

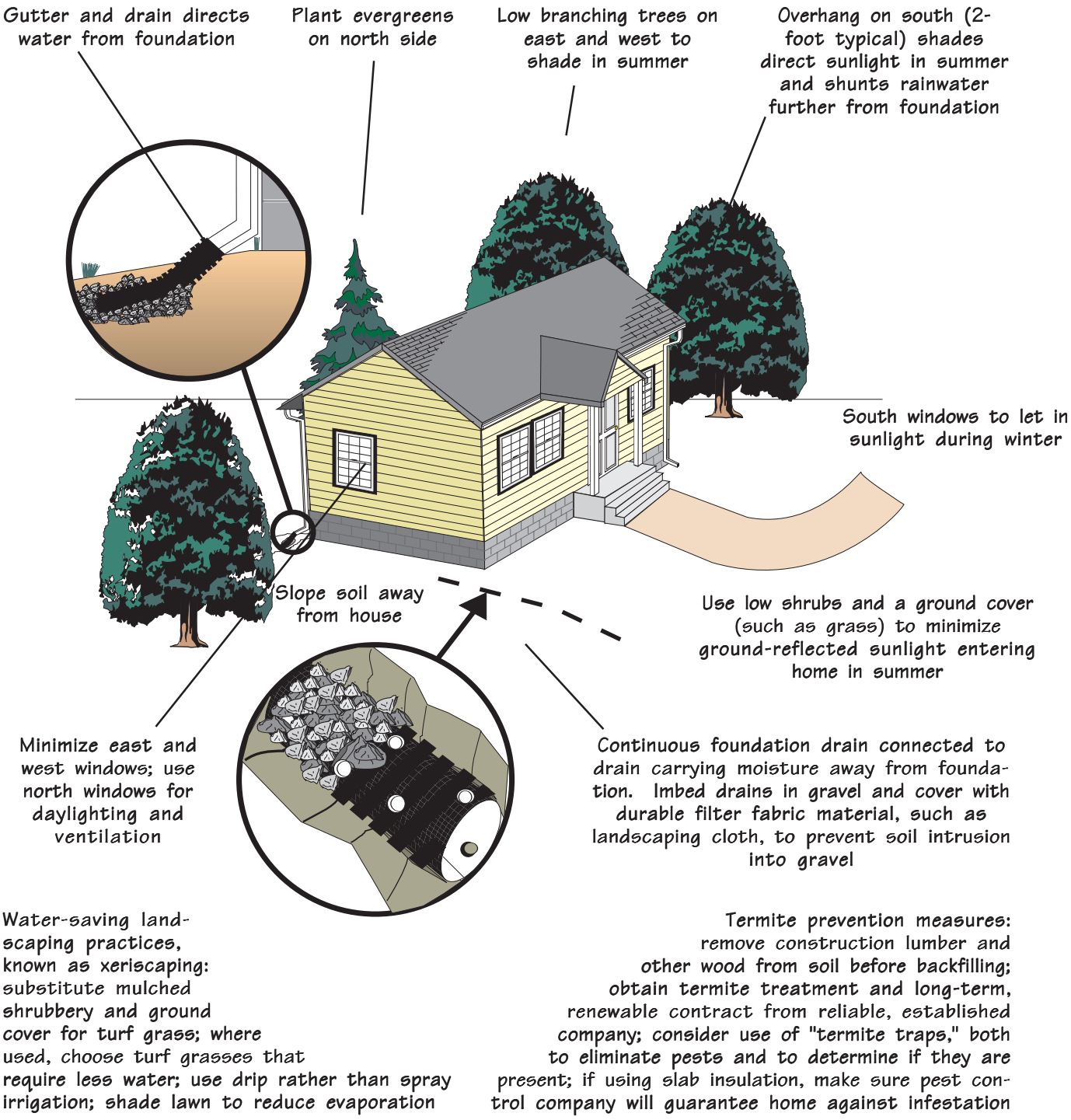

2. Footing and Foundation Wall

1. If required or specified, insulate footing and foundation wall — make footing trench wide enough for foam insulation board. Meet with pest control company to discuss viability of termite contract with insulated foundation wall.
2. Install layer of 6-mil polyethylene as a capillary break; the earth inside crawlspace should be higher than outside grade.
3. Set rebar as required and pour concrete.
4. Build foundation wall.
5. Waterproof below-grade portion of foundation wall.
6. Wrap plastic against foundation wall.
7. If conditioned basement or habitable rooms are located behind foundation wall, insulate exterior with 1-2 inches of foam insulation or insulate interior of wall.
8. Cover perforated drain pipe with gravel; install filter fabric over drainage pipe and gravel.
9. When backfilling foundation wall, slope earth away from house 5% (1' vertical for every 20' horizontal). Consider using a high density fiberglass drainage board over or in place of insulation.

Figure 1-5
Footing and Foundation Wall

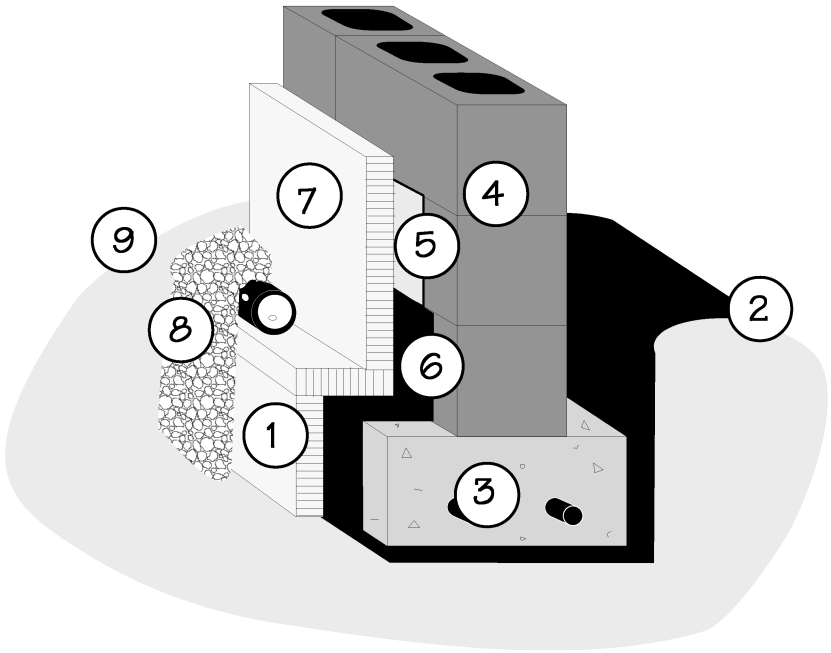

FOUNDATION ALTERNATIVES

Figure 1-6
Foundation Alternatives

A) For uninsulated crawlspace walls — skip foam insulation and waterproofing. The earth inside the crawlspace should be higher than outside grade. If not, install a drainage system.

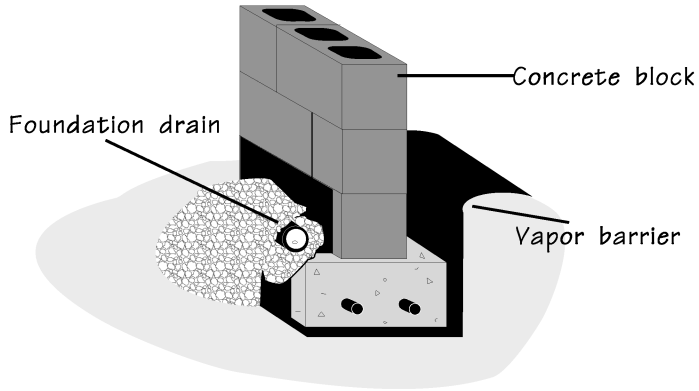

B) Insulated concrete form (ICF) foundations — check with manufacturer carefully for cost effectiveness, recommended waterproofing, type of termite treatments, concrete specifications, reinforcing requirements, and other stipulations.

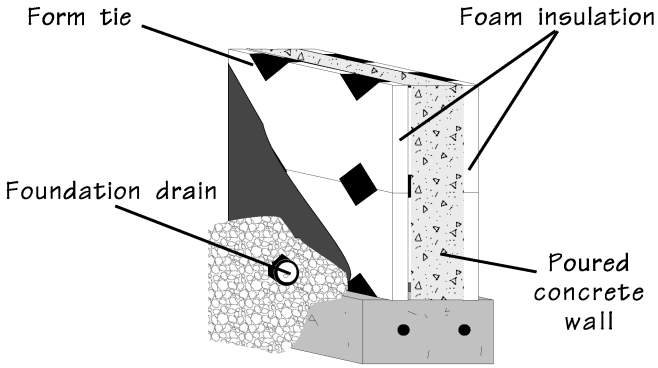

C) Pier foundations — insulation under the floor of pier foundations can deteriorate over time due to air leakage, moisture, and pests. For high performance homes, insulate under the floor with complete coverage and install a complete air barrier under the floor joists. Seal all penetrations through the air barrier, and caulk all seams and joints.

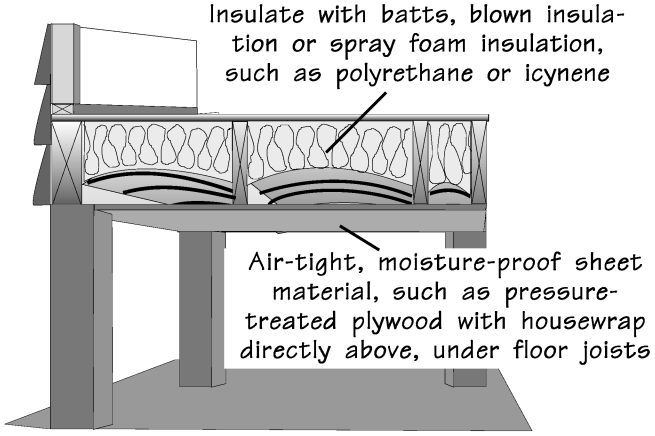

3. Crawlspace or Unconditioned Basement

1. Install operable foundation vents, as required by local codes, in crawlspace walls (check for changes in codes, as the requirement for foundation vents is being reevaluated in certain areas).
2. Consider "engineered" joists - wood I-joists or floor trusses — in place of dimensional lumber such as 2x10s or 2x12s.
3. Set band joists and floor joists on top of capillary break, such as termite shield, sill sealer material, or polyethylene.
4. Glue subfloor to band joists and framing around openings, as in the case of basement stairs.
5. Lay plastic vapor barrier on crawlspace floor.
6. Seal all holes through floor as home is constructed.

Figure 1-7
Crawlspace or Unconditioned Basement

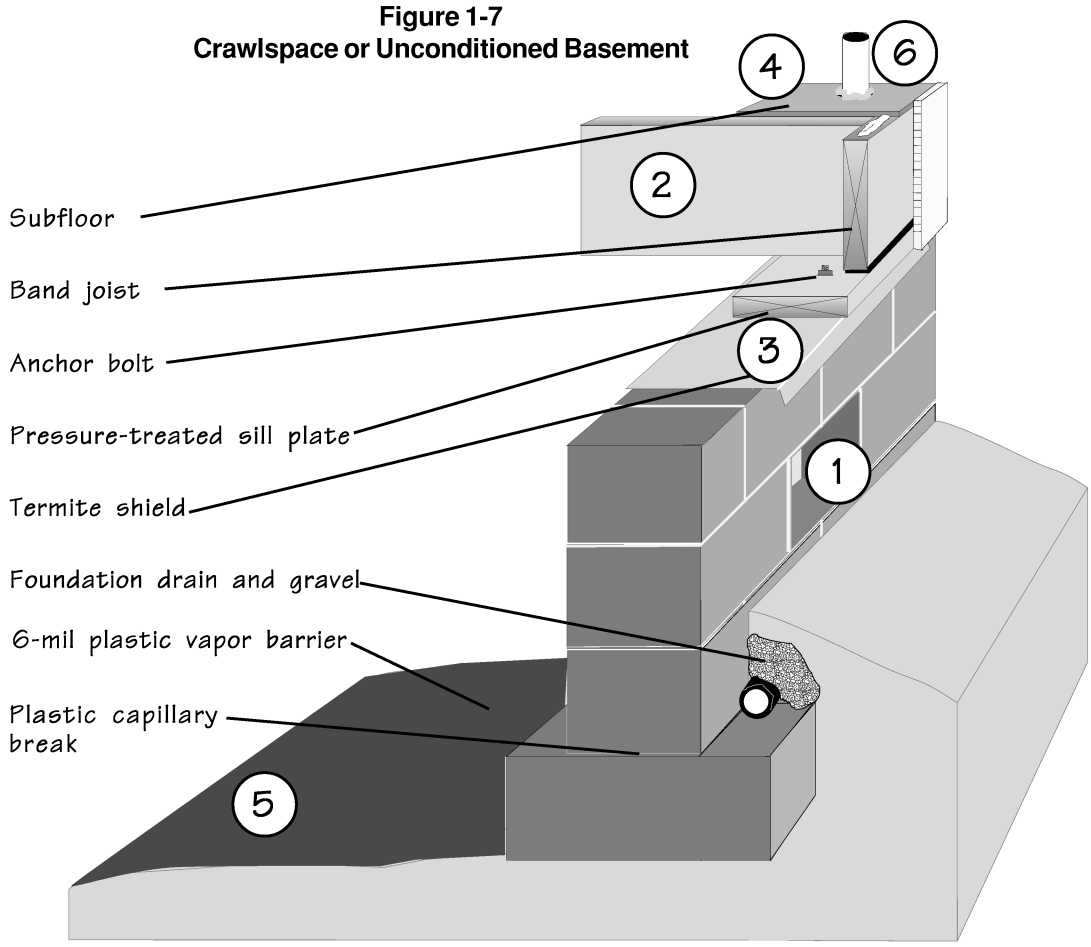

4. Floor — Conditioned Basement

See details for crawlspace floors; after foundation wall is built:

1. Caulk under termite shield.
2. Install termite shield, seal all joints and holes for anchor bolts.
3. Place sill sealant material.
4. Predrill pressure-treated sill plate — bolt in place.
5. Set joists.
6. Seal seam between band joist and sill plate with durable caulking — either between joists and plates or from outside after floor framing is completed.
7. Caulk subfloor to band joist.
8. Waterproof wall.
9. Install interior framed, insulated wall.

Figure 1-8
Interior Framed, Insulated Wall

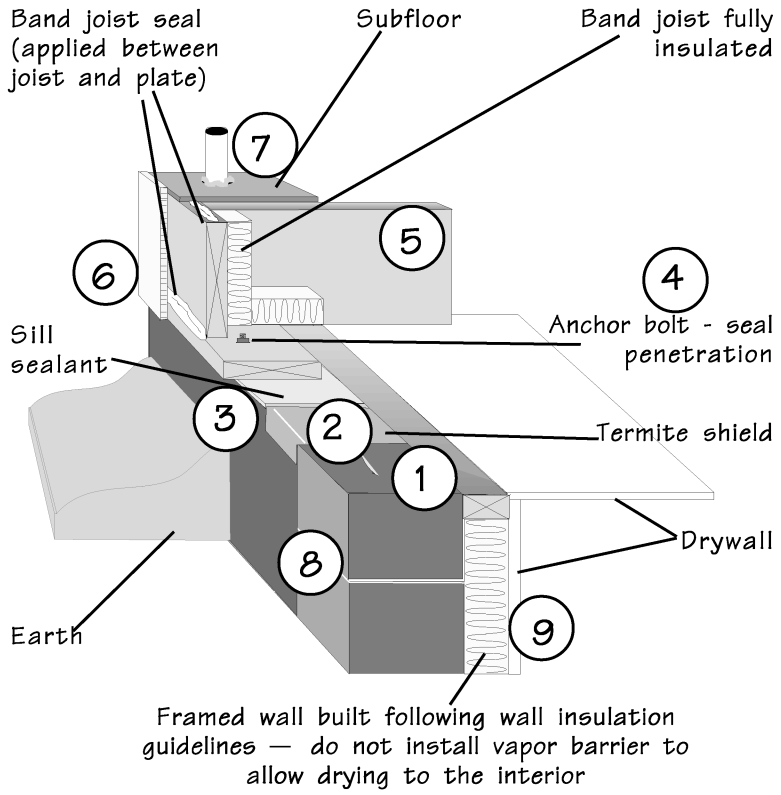

5. Insulated Floor

Figure 1-9
Insulated Floor

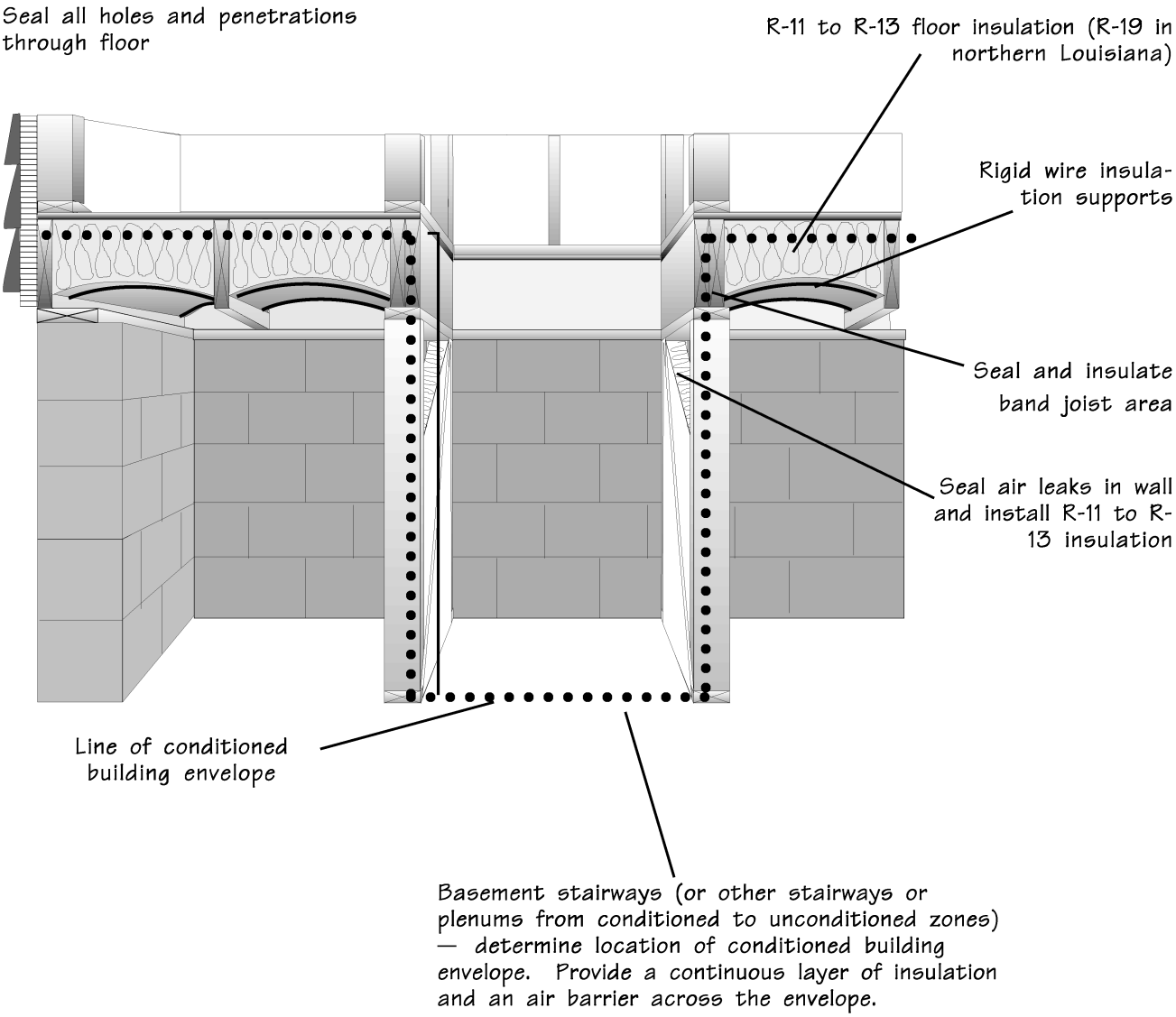

6. Wall Framing

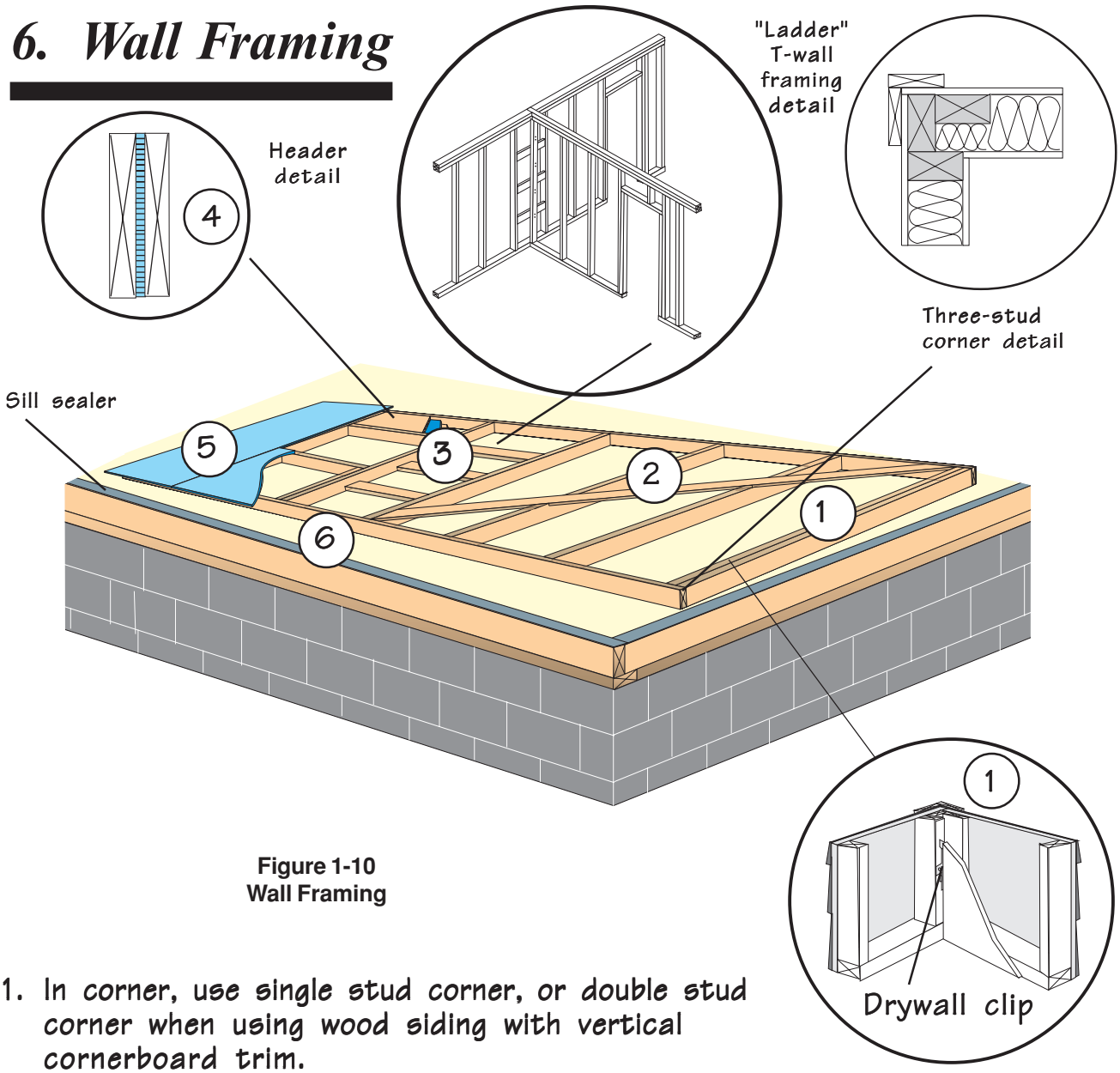

Figure 1-10
Wall Framing

1. In corner, use single stud corner, or double stud corner when using wood siding with vertical cornerboard trim.
2. Use metal T-brace or 1 x 4 let-in bracing for corners.
3. At partition wall (T-wall) intersection, eliminate additional studs for nailing drywall; use "ladder" instead.
4. Add 1/2" foam to structural headers.
5. Cover wall with 1/2" foam sheathing, including band joists and second top plates.
6. Before lifting wall in place, attach sill sealant material to subfloor or apply a double bead of caulking.

7. Wall and Ceiling Detailing

Figure 1-11
Wall and Ceiling Detailing

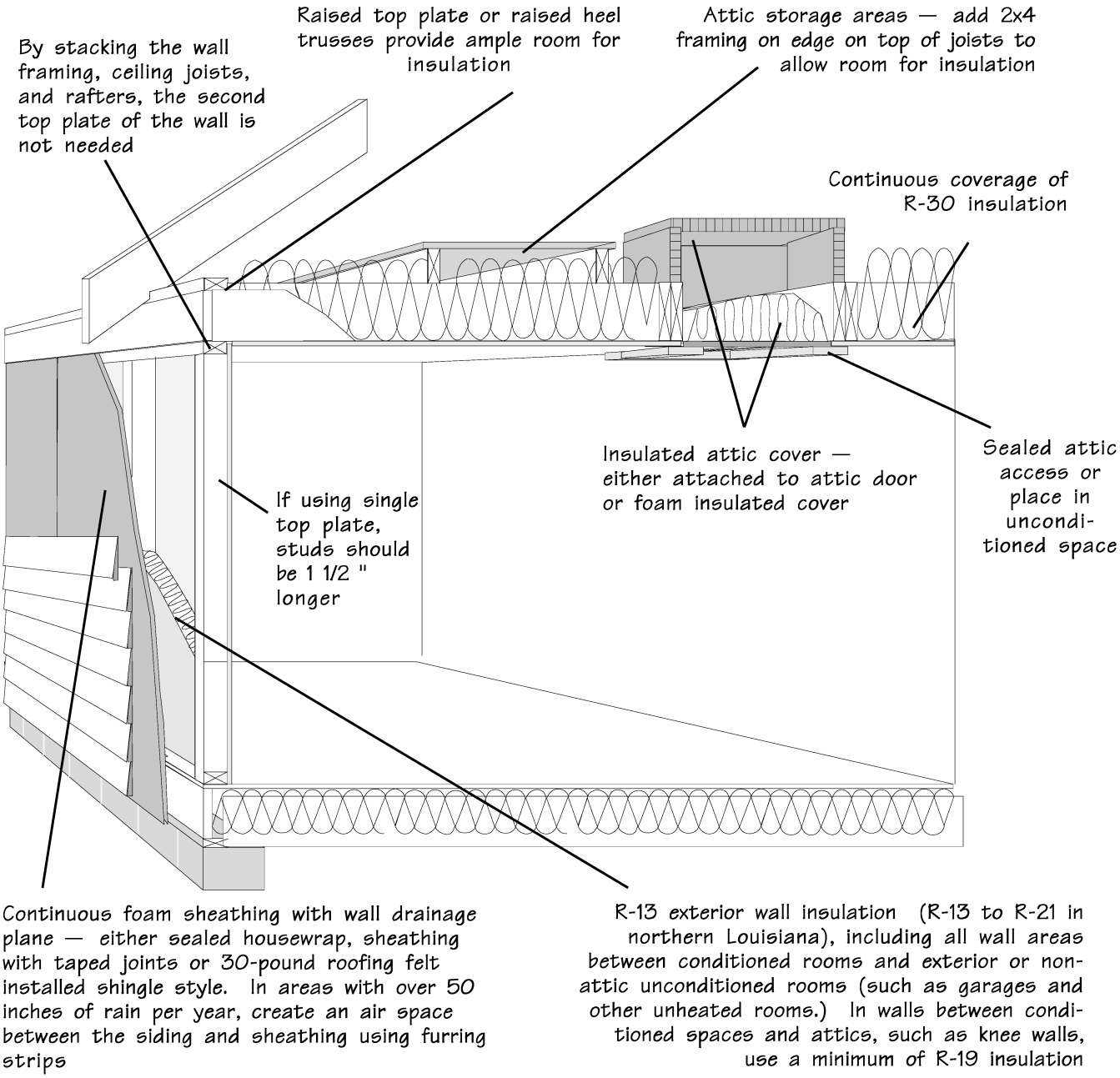

8. Seal Holes and Penetrations

Figure 1-12
Sealing Holes and Penetrations

Seal plumbing penetrations

1. Cover all chases and framing open to attic with drywall or other fire-resistant sheet good. Seal all holes and cracks in cover.
2. Locate plumbing on interior walls.
3. Use firestop-rated caulk to seal holes into attic.
4. Insulate behind tub or shower units on exterior walls.
5. Seal under tubs and showers, especially the drain piping.
6. Caulk between drywall and piping penetrations.

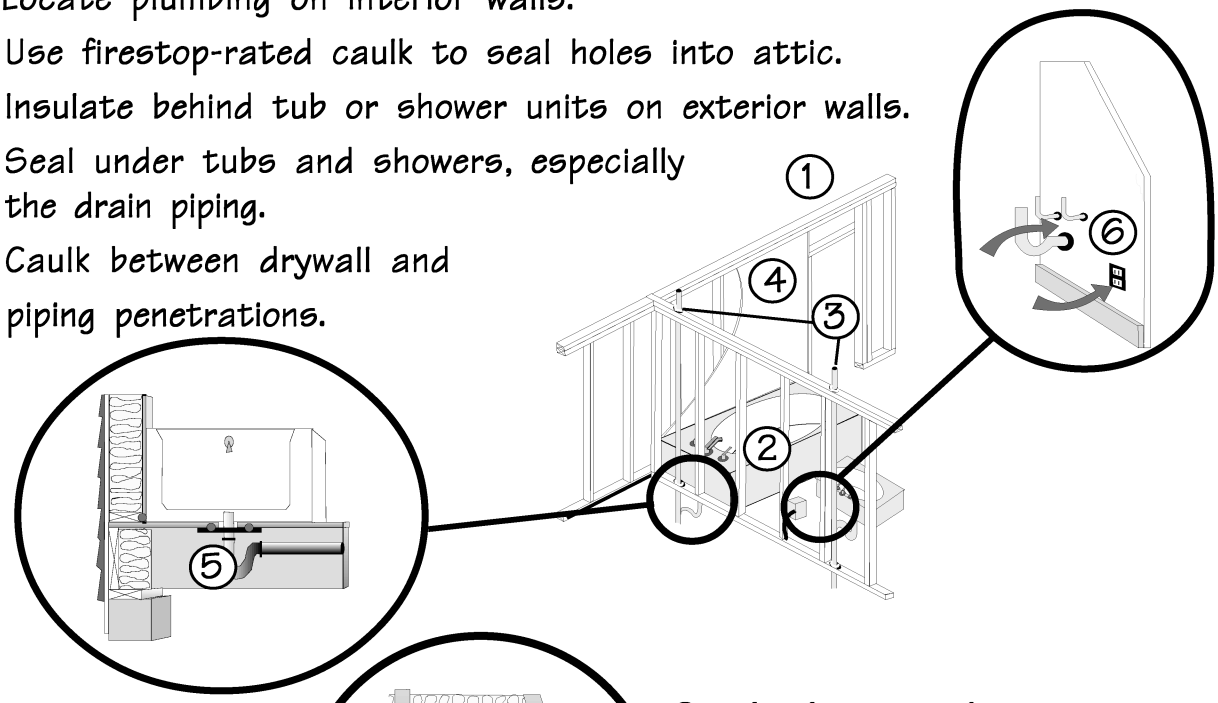

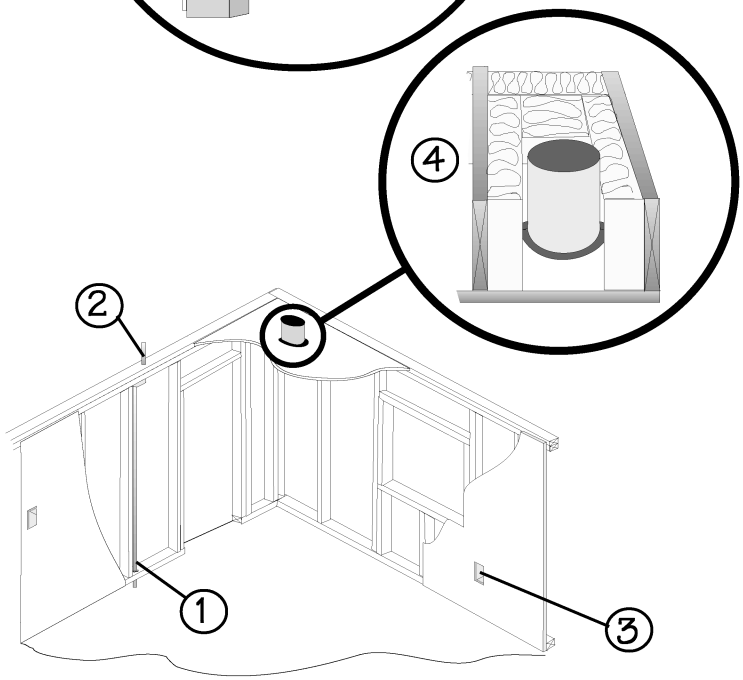

Seal electrical penetrations

1. Seal holes through bottom plate.
2. Use firestop-rated caulk to seal holes into attic.
3. Caulk between drywall and all electrical boxes, including receptacles, switches, and lights.
4. Minimize use of recessed lights; where used choose IC (insulated cover) lamps that also have airtight ratings.

9. HVAC Systems

Figure 1-13
HVAC Systems

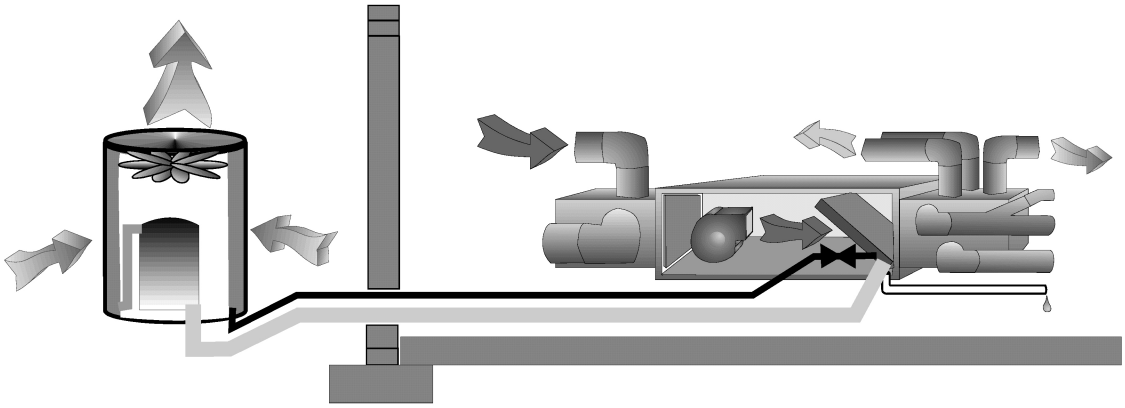

1. Size for heating and cooling load using Manual J techniques.
2. Size latent (dehumidification) load for cooling system.
3. Compare cost and projected energy savings of at least 3 HVAC contractor bids and 3 equipment options:
   a. Minimum efficiency: SEER 10-12 cooling, AFUE 0.78-0.80 furnace, HSPF 6.8-7.2 heat pump
      (new code changes may disallow this lower efficiency equipment)
   b. Moderate efficiency: SEER 12-13 cooling, AFUE .80-.84 furnace, HSPF 7.2-7.6 heat pump
   c. High efficiency: SEER 13-15 cooling, AFUE .90+ furnace, HSPF 7.6-8.2 heat pump
4. Consider a single, automatically controlled zoned system instead of two or more separate systems.
5. When selecting a contractor, don't just go by price:
   a. reputation for quality
   b. type of duct system
   c. number of returns
   d. sound muffling components
   e. willingness to ensure and test for pressure imbalances, proper airflow, and airtight ductwork

10. Ductwork

1. Design ducts using Manual D methods; locate as much ductwork as possible in conditioned spaces sealed from outside.
2. Install returns in each room with a closeable door and more than one supply.
3. Undercut doors in rooms with a single supply by a clear 3/4" to 1" above flooring/carpet.
4. Seal ducts with mastic or mastic and fiber mesh — use guidelines in Chapter 8.
5. Test ducts for air tightness.
6. Test home for pressure imbalance problems.

Figure 1-14
Duct Testing Fan Setup

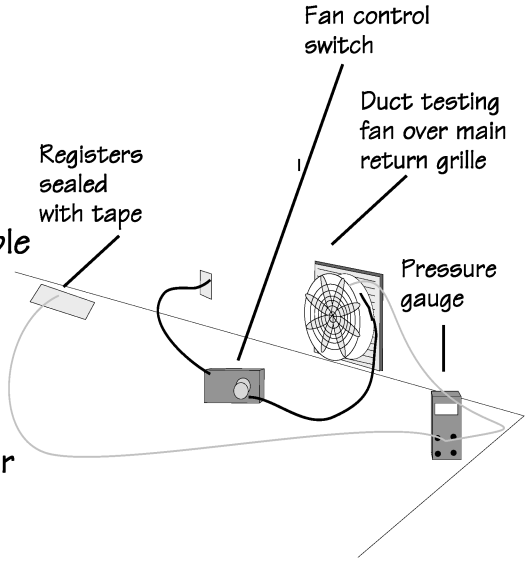

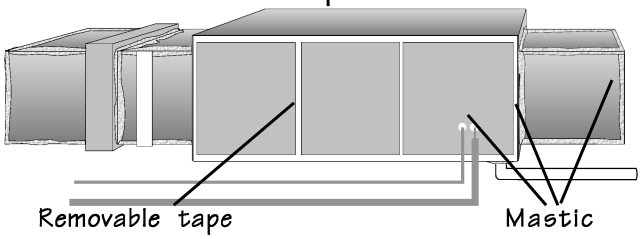

Many air handler cabinets come from the factory with leaks. Use mastic to seal holes and seams. Seal removable panels with cloth or metal duct tape.

Figure 1-15
Prevent Pressure Imbalances

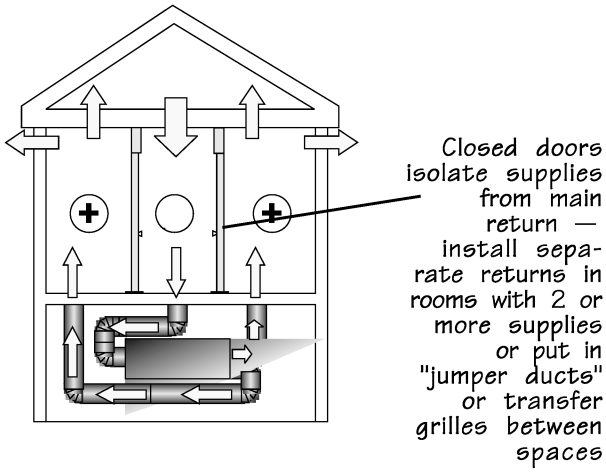

Figure 1-16
Sealing Flex Duct Takeoffs

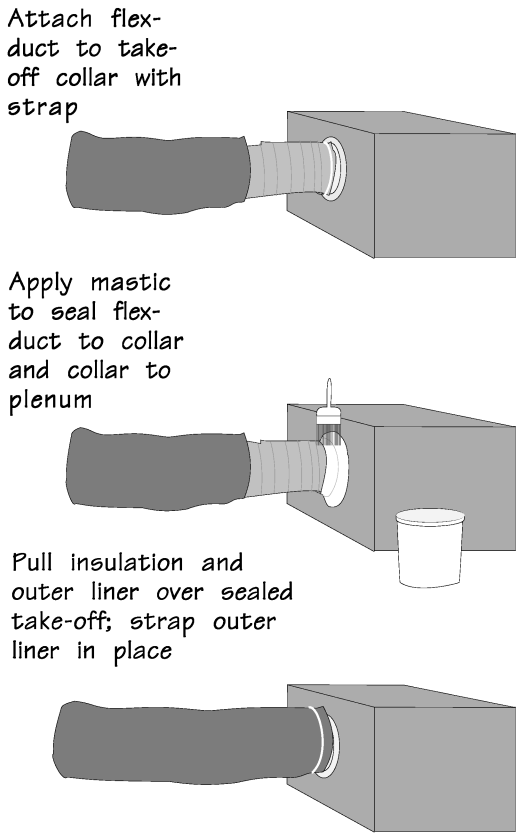

Notes:

Notes:

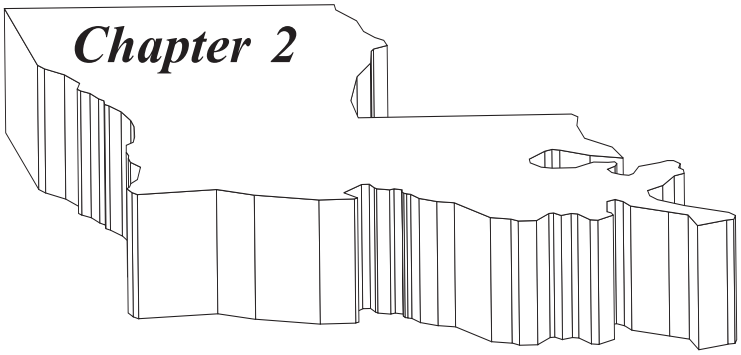

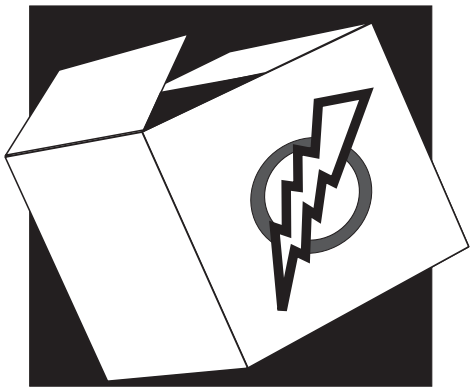

Energy Efficient Packages

Investments in energy efficient features in new construction are remarkable because everyone wins:

- ❒ Most homeowners receive a positive cash flow immediately, at worst case within 1 to 3 years.
- ❒ Homeowners benefit additionally from improved comfort, better indoor quality, reduced moisture problems, and fewer health problems.
- ❒ Builders have fewer callbacks and make additional profit from the extra construction costs.
- ❒ Heating and cooling contractors have fewer callbacks.
- ❒ Realtors receive additional fees from the additional cost of the energy features and enhance their reputation by selling higher quality homes that consumers appreciate.
- ❒ Bankers receive higher mortgage payments and have more secure loans because the homes have lower annual costs of ownership due to the reduced energy bills.
- ❒ National lending agencies, such as the Federal Housing Authority (FHA) and the Veteran's Administration (VA), require some degree of efficiency by mandating that new homes comply with a residential energy code.
- ❒ The local economy benefits as more money stays within the community and local subcontractors and product suppliers make additional income by selling improved energy efficient features.

Achieving Efficiency

Successful, cost effective, energy efficient homes are no accident. They require diligent attention to detail.

Too often, measures that may be easier to market are installed, but key ingredients — such as sealing air leaks and duct leaks — are left undone. The results are homes with unnecessarily high energy bills, comfort and moisture problems, and homeowners who are thoroughly dissatisfied — hardly a positive customer relations situation.

Designing and building a home that uses energy wisely does not mean sacrificing a home's aesthetics or amenities. Homes of any architectural style can meet the requirements of this publication. Any good home design considers the characteristics of a particular site: the local climate, the availability and cost of energy sources, and the lifestyle of the occupants.

Building an energy efficient home does not require special materials or construction skills. However, the quality of basic construction has a major influence on building comfort and energy costs, especially:

- ❒ Quality of framing and installation of insulation and windows.
- ❒ Attention to detail in sealing air leaks.
- ❒ Design and installation of the heating and cooling equipment.
- ❒ Effectiveness of sealing duct leaks.

Successful builders of energy efficient homes realize the importance of quality. They also know that achieving low energy costs and greater comfort in today's competitive marketplace requires careful planning throughout the design and construction process.

Table 2-1 shows the additional components and their estimated costs for a typical high performance home. Major additional costs are for increased insulation, air sealing, duct insulation and sealing, higher efficiency heating and cooling systems, more efficient lighting, and an improved ventilation system.

Table 2-2 shows the projected financial savings for a "high performance" home. The cumulative net savings are over $14,000 over a 30-year period. The investment begins providing a positive cash flow in the second year, once the additional downpayment for the energy features, added into the first year's extra mortgage, has been paid. (Energy costs are assumed to escalate 2% per year.)

Table 2-2
Savings for a 5-Star Home
(for a 2,000-sq ft home in Baton Rouge)

Code Home		Five-Star Home			
Year	Annual Energy Cost	Extra Mortgage Cost*	Annual Energy Cost	Total Cost	Cumu-. lative Savings
1	1,843	710	1,258	1,968	-125
2	1,880	217	1,283	1,500	254
3	1,917	217	1,309	1,526	646
4	1,956	217	1,335	1552	1050
5	1,995	217	1,362	1,579	1,466
10	2,203	217	1,503	1,720	3,742
15	2,432	217	1,660	1,877	6,368
20	2,685	217	1,832	2,050	9,381
25	2,964	217	2,023	2,240	12,820
30	3,273	217	2,234	2,451	16,729

*The extra mortgage costs are for financing energy efficient features. The first year costs are higher because they include the additional downpayment. Energy costs are assumed to increase 2% per year. The home has a partial slab floor and a partial framed floor over a pier foundation.

Table 2-1
Estimated Extra Costs of 5-Star Homes*

For a 2,000 sq. ft. home in Baton Rouge			
	Quantity	Unit Cost	Total Estimated Cost
Attic -- increase insulation from R-19 to R-30	1,000 sq ft	$0.10/sq ft	100
Cathedral Ceiling -- increase insulation from R-19 to R-25	600 sq ft	$0.20/sq ft	120
Energy efficient framing details (no extra cost)			
Walls and band joist -- R-13 in place of R-11, 1/2" foam sheathing in place of OSB; install let-in bracing; seal band joists and insulate with R-19	2404 sq ft	$0.12/sq ft	288
Insulate floor to R-19 (from uninsulated condition)	630 sq ft	$0.50/sq ft	315
Windows -- install double-paned vinyl units (U-value of 0.50) in place of single-paned wood windows	346 sq ft	$1.50 /sq ft	519
Air leakage -- completely seal all bypasses and penetrations between unconditioned and conditioned spaces	2000 sq ft	$0.1 /sq ft	200
Heating and cooling system -- size for home, ensure quality installation, design duct system, check for proper air flow, consider higher efficiency heating	1 unit	$150 each	150
Cooling efficiency -- select SEER 12 air conditioners in place of SEER 10 units	1 unit	$250 each	250
Charge cooling/ heat pump systems per manufacturer's instructions; locate unit where air can circulate freely	1 unit	$ 50 each	50
Install water heater wrap on water heater	1 unit	$30 each	30
Replace about half of incandscent lamps with compact fluorescent lighting	6 lamps	$20 / lamp	120
Seal all supply and return duct systems	1 unit	$175 each	175
Insulate ductwork to R-6	400/ sq ft	$0.20/ sq ft	80
Install improved ventilation fans; add dampered duct for fresh make-up air for ventilation system	1 system	$100 each	100
Lengthen overhangs/ install shade screens on east and west	330	$2/ sq ft	660
More efficient clothes washer, cooking appliances, refrigerator	4	$100 each	400
COST SUBTOTAL			**3,557**
Reduction in heating and cooling system cost			**(1,097)**
NET TOTAL COST			**$ 2,460**

* The dimensions are for a home that is partially 1-story and partially 2-story to seek an average cost increment for this size of home.

Table 2-3
Minimum Designs that Meet the Model Energy Code

City	Glazing Area Percent	Glazing U-value	Ceiling R-Value	Wall R-Value	Floor R-Value	Slab Perimeter R-Value	Crawl Space Wall R-Value
Lafeyette, Lake Charles, New Orleans and areas with 1,500 to 1,999 heating degree days							
	8%	Any	R-19	R-11	R-11	R-0	R-5
	12%	0.75	R-19	R-11	R-11	R-0	R-5
	15%	0.75	R-26	R-13	R-11	R-0	R-5
	18%	0.65	R-30	R-13	R-11	R-0	R-5
	20%	0.60	R-30	R-13	R-11	R-0	R-5
	25%	0.52	R-30	R-13	R-13	R-0	R-6
Shreveport, Monroe, Alexandria and areas with 2,000 to 2,499 heating degree days							
	8%	0.90	R-19	R-11	R-11	R-0	R-6
	12%	0.65	R-19	R-13	R-11	R-0	R-5
	15%	0.65	R-30	R-13	R-11	R-0	R-6
	18%	0.55	R-30	R-13	R-11	R-0	R-6
	20%	0.52	R-38	R-13	R-11	R-0	R-6
	25%	0.50	R-38	R-13	R-19	R-0	R-10
Ruston and areas with 2,500 to 2,999 heating degree days							
	8%	0.70	R-26	R-11	R-11	R-0	R-6
	12%	0.60	R-26	R-13	R-13	R-0	R-5
	15%	0.60	R-30	R-13	R-19	R-0	R-7
	18%	0.52	R-30	R-13	R-19	R-4	R-7
	20%	0.50	R-38	R-13	R-19	R-0	R-7
	25%	0.46	R-58	R-13	R-19	R-0	R-7

THE MODEL ENERGY CODE

The Model Energy Code is a national code developed by the Council of American Building Code Officials. The code has requirements for:

- ❒ Thermal insulation
- ❒ Air sealing
- ❒ HVAC system design
- ❒ Hot water conservation
- ❒ Duct insulation and sealing

The Model Energy Code was the starting point for development of the International Energy Conservation Code (IECC). Many states around the country are now adopting the IECC 2000.

Table 2-3 shows combinations that comply with the IECC 2000. The table shows that using R-30 as a standard for ceiling insulation provides room for trade-offs with other aspects of the home. For example, in New Orleans some packages require less than R-30 in attics. Homes with R-30 could trade-off the extra insulation for greater window area or less insulation elsewhere.

Wall R-values and glazing U-values prescribed in Table 2-3 depend largely on geographical locations and the percentage of total wall area occupied by windows. The window percentage represents the ratio of the total area of all glazing area, including windows, sliding glass doors, glass in door units, and basement windows, to the total wall area. For example, a home with 2,000 square feet of total exterior wall area and 15% window area

will have 300 square feet of glazing area (2,000 sq ft x 15% = 300 sq ft.)

The window's insulating values are reported as U-values because the National Fenestration Rating Council (NFRC), whose labels appear on many windows sold in the United States, and other organizations use this measure rather than its opposite -- the R-value. R-values measure the resistance to heat flow. The U-value, which measures how well a material conducts heat, is the reciprocal of R-value — U-value = 1/R-value.

Typical industry average window U-values are:

Single-glazed windows	U - 1.10
Double-glazed	
metal — no thermal break	U - 0.78
metal — thermal break	U - 0.62
wood frame or wood with vinyl or metal cladding	U - 0.55
Double-glazed	
Low-e	U - 0.37
Low-e with inert gas fill	U - 0.31
Triple-glazed low-e with inert gas fill	U - 0.26
Quad-glazed low-e with inert gas fill	U - 0.20

- ❒ Wall R-values are the sum of cavity insulation plus sheathing -- not including siding, structural sheathing, or interior drywall.
- ❒ Ceiling R-values represent the sum of cavity insulation plus any sheathing.
- ❒ Floor requirements apply to floors over unconditioned crawlspaces, basements, and garages; however, cantilevered floors and other floors over outside air must meet ceiling requirements.
- ❒ Crawlspace wall R-value requirements are for walls of unvented crawlspaces, extending from the top of the wall to at least 12 inches below the outside finished grade.

MECcheck is a simplified approach to determine compliance with residential energy codes. It was developed by Pacific Northwest National Labs (PNNL). The software performs trade-offs between building components including heating and cooling system efficiency. The software can be downloaded at http://www.energycodes.gov.

Evaluating Energy Efficient Products

The energy efficient builder seeks to minimize the lifetime costs of a home rather than the first cost. Making such calculations is often time-consuming and confusing. One of the best ways to determine whether an investment is sound is to compare the annual energy savings with the additional annual mortgage costs to find the Net Annual Savings.

Simple Payback

For example, suppose you are wondering whether it is worthwhile to install efficient, low-e windows which use special coatings to reduce heat loss and gain. You receive the following information comparing low-e windows to double-glazed windows from a window dealer:

- ❒ Additional Window Cost = $500
- ❒ First Year Energy Savings = $75

You can easily calculate that the simple payback period on the above investment is just under 7 years (500/75). However, you are unsure whether the payback is acceptable.

Net Annual Savings

To find the Net Annual Savings, find the extra mortgage costs for the windows:

- ❒ Mortgage Interest Rate = 8.0%
- ❒ Term of Mortgage = 30 years
- ❒ Monthly Payment per $1,000 (from Table 2-5) = $7.69
- ❒ Annual Payment per $1,000 (Monthly payment x 12 months/year) = $7.69 * 12 = $92.28 per year for $1,000 of principal
- ❒ Extra Annual Payment (multiply the additional cost of the windows by the above factor/1,000) = $500 * $92.28/$1,000 = $46 per year payment
- ❒ Net Annual Energy Savings (subtract the annual payment from annual energy savings) = $75 - $46 = $29

Since the Net Annual Energy Savings is positive, the investment is sound, especially when considering that energy costs will increase over time, while mortgage costs will remain relatively constant.

Internal Rate of Return

It is often useful to calculate the Internal Rate of Return (IRR) for an energy investment. Homeowners can compare the annual return from an energy measure to that earned by a typical financial investment at a bank. To find the IRR for the above example:

1. Find the payback period (divide the total cost by the annual savings) = 500/75 = about 7 years.

2. Determine the life of the energy measure = over 20 years.

3. To find the IRR, locate the row in Table 2-4 for the 7-year payback; then slide across to the 20-year column and find the IRR, which is 15% in this example(and it's tax free).

Table 2-4
Rate of Return for Energy Investments (%)

Simple Payback	Lifetime of Energy Investments (Years)			
	5	10	15	20
1.5	62%	68%	69%	69%
2	43%	51%	52%	52%
3	21%	33%	35%	35%
4	9%	23%	26%	27%
5	1%	17%	20%	21%
6	0%	12%	16%	18%
7	0%	9%	13%	15%
8	0%	6%	11%	13%
9	0%	4%	9%	11%
10	0%	2%	7%	10%
11	0%	0%	6%	8%
12	0%	0%	5%	7%
13	0%	0%	4%	6%
14	0%	0%	3%	6%
15	0%	0%	2%	5%
16	0%	0%	1%	4%
17	0%	0%	0%	3%
18	0%	0%	0%	3%
19	0%	0%	0%	2%
20	0%	0%	0%	2%

Note: A zero indicates the rate of return is either negligible or negative. Energy prices are assumed to escalate 2%/ year.

MORTGAGE RATE TABLES

The following tables show the monthly payment for principal and interest for a $1,000 loan at various interest rates and amortization periods. According to the chart, a mortgage of 20 years at 10% annual interest would have monthly payments of $9.65 per $1,000 of principal or 12 x 9.65 = $115.80 per year of payments per $1,000 of principal. If the extra energy features of a home cost an additional $2,500, the extra annual mortgage would be $2,500 x $115.80 / $1,000 = $289.50.

This approach is useful in comparing different methods of financing construction loans and permanent mortgages and their effect on the economics of energy efficient construction techniques.

Table 2-5
Mortgage Rate Table 1*

Years of Amortization \ Interest Rate	5.00	5.25	5.50	5.75	6.00	6.25	6.50	6.75	7.00	7.25	7.50	7.75	8.00
5	18.87	18.99	19.10	19.22	19.33	19.45	19.57	19.68	19.80	19.92	20.04	20.16	20.28
7	14.13	14.25	14.37	14.49	14.61	14.73	14.85	14.97	15.09	15.22	15.34	15.46	15.59
10	10.61	10.73	10.85	10.98	11.10	11.23	11.35	11.48	11.61	11.74	11.87	12.00	12.13
15	7.91	8.04	8.17	8.30	8.44	8.57	8.71	8.85	8.99	9.13	9.27	9.41	9.56
17	7.29	7.42	7.56	7.69	7.83	7.97	8.11	8.25	8.40	8.54	8.69	8.83	8.98
20	6.60	6.74	6.88	7.02	7.16	7.31	7.46	7.60	7.75	7.90	8.06	8.21	8.36
25	5.85	5.99	6.14	6.29	6.44	6.60	6.75	6.91	7.07	7.23	7.39	7.55	7.72
30	5.37	5.52	5.68	5.84	6.00	6.16	6.32	6.49	6.65	6.82	6.99	7.16	7.34

*Monthly mortgage payments per $1,000 of principal

Mortgage Rate Table 2*

Years of Amortization \ Interest Rate	8.25	8.50	8.75	9.00	9.25	9.50	9.75	10.00	10.25	10.50	10.75	11.00	11.25
5	20.40	20.52	20.64	20.76	20.88	21.00	21.12	21.25	21.37	21.49	21.62	21.74	21.87
7	15.71	15.84	15.96	16.09	16.22	16.34	16.47	16.60	16.73	16.86	16.99	17.12	17.25
10	12.27	12.40	12.53	12.67	12.80	12.94	13.08	13.22	13.35	13.49	13.63	13.78	13.92
15	9.70	9.85	9.99	10.14	10.29	10.44	10.59	10.75	10.90	11.05	11.21	11.37	11.52
17	9.13	9.28	9.43	9.59	9.74	9.90	10.05	10.21	10.37	10.53	10.69	10.85	11.02
20	8.52	8.68	8.84	9.00	9.16	9.32	9.49	9.65	9.82	9.98	10.15	10.32	10.49
25	7.88	8.05	8.22	8.39	8.56	8.74	8.91	9.09	9.26	9.44	9.62	9.80	9.98
30	7.51	7.69	7.87	8.05	8.23	8.41	8.59	8.78	8.96	9.15	9.33	9.52	9.71

*Monthly mortgage payments per $1,000 of principal

Mortgage Rate Table 3*

Years of Amortization \ Interest Rate	11.50	11.75	12.00	12.25	12.50	12.75	13.00	13.25	13.50	13.75	14.00	14.25	14.50
5	21.99	22.12	22.24	22.37	22.50	22.63	22.75	22.88	23.01	23.14	23.27	23.40	23.53
7	17.39	17.52	17.65	17.79	17.92	18.06	18.19	18.33	18.46	18.60	18.74	18.88	19.02
10	14.06	14.20	14.35	14.49	14.64	14.78	14.93	15.08	15.23	15.38	15.53	15.68	15.83
17	11.18	11.35	11.51	11.68	11.85	12.02	12.19	12.36	12.53	12.70	12.87	13.05	13.22
20	10.66	10.84	11.01	11.19	11.36	11.54	11.72	11.89	12.07	12.25	12.44	12.62	12.80
25	10.16	10.35	10.53	10.72	10.90	11.09	11.28	11.47	11.66	11.85	12.04	12.23	12.42
30	9.90	10.09	10.29	10.48	10.67	10.87	11.06	11.26	11.45	11.65	11.85	12.05	12.25

*Monthly mortgage payments per $1,000 of principal

Table 2-5 (continued)
Mortgage Rate Table 4*

Years of Amortization \ Interest Rate	14.75	15.00	15.25	15.50	15.75	16.00	16.25	16.50	16.75	17.00	17.25	17.50	17.75
5	23.66	23.79	23.92	24.05	24.19	24.32	24.45	24.58	24.72	24.85	24.99	25.12	25.26
7	19.16	19.30	19.44	19.58	19.72	19.86	20.00	20.15	20.29	20.44	20.58	20.73	20.87
10	15.98	16.13	16.29	16.44	16.60	16.75	16.91	17.06	17.22	17.38	17.54	17.70	17.86
15	13.83	14.00	14.17	14.34	14.51	14.69	14.86	15.04	15.21	15.39	15.57	15.75	15.92
17	13.40	13.58	13.75	13.93	14.11	14.29	14.47	14.65	14.84	15.02	15.20	15.39	15.57
20	12.98	13.17	13.35	13.54	13.73	13.91	14.10	14.29	14.48	14.67	14.86	15.05	15.24
25	12.61	12.81	13.00	13.20	13.39	13.59	13.79	13.98	14.18	14.38	14.58	14.78	14.97
30	12.44	12.64	12.84	13.05	13.25	13.45	13.65	13.85	14.05	14.26	14.46	14.66	14.8

*Monthly mortgage payments per $1,000 of principal

Mortgage Rate Table 5*

Years of Amortization \ Interest Rate	18.00	18.25	18.50	18.75	19.00	19.25	19.50	19.75	20.00	20.25	20.50	20.75	21.00	21.25
5	25.39	25.53	25.67	25.80	25.94	26.08	26.22	26.35	26.49	26.63	26.77	26.91	27.05	27.19
7	21.02	21.16	21.31	21.46	21.61	21.76	21.91	22.06	22.21	22.36	22.51	22.66	22.81	22.96
10	18.02	18.18	18.34	18.50	18.67	18.83	19.00	19.16	19.33	19.49	19.66	19.83	19.99	20.16
15	16.10	16.28	16.47	16.65	16.83	17.01	17.19	17.38	17.56	17.75	17.93	18.12	18.31	18.49
17	15.76	15.94	16.13	16.32	16.50	16.69	16.88	17.07	17.26	17.45	17.64	17.83	18.02	18.22
20	15.43	15.63	15.82	16.01	16.21	16.40	16.60	16.79	16.99	17.18	17.38	17.58	17.78	17.97
25	15.17	15.37	15.57	15.78	15.98	16.18	16.38	16.58	16.78	16.99	17.19	17.39	17.60	17.80
30	15.07	15.28	15.48	15.68	15.89	16.09	16.30	16.50	16.71	16.92	17.12	17.33	17.53	17.74

*Monthly mortgage payments per $1,000 of principal

HOME ENERGY PACKAGES

A well designed energy efficient home requires close attention to detail on the part of the builder and designer. Insulation and high quality windows are not enough; to seek out and eliminate energy waste, the homebuilder must have a well planned approach with careful management of the details.

The designer and builder should compare the initial cost of features to long-term energy savings. Successful builders realize that efficiency not only saves money, but also improves the quality, comfort, and durability of the home. Quality construction reduces the builder's risk and liability; comfort provides a satisfied customer; and durability means fewer call backs and higher profits.

A ***Home Energy Package*** is a planning and marketing tool that can prove invaluable to those involved in home construction and sales. The four packages are:

- ❒ **Code** — The insulation components meet the Model Energy Code, but the builder did not pay substantial attention to air sealing, duct sealing, or installation of the heating and cooling systems.
- ❒ **5-Star** — A modest effort beyond standard energy conservation measures which can save up to 30 percent on energy bills.
- ❒ **5-Star Plus** — An aggressive program that can reduce energy costs as much as 60 percent compared to standard energy conserving homes.
- ❒ **5-Star/ Passive Solar** — A sound energy efficiency program which also incorporates additional south-facing glazing and thermal mass to reduce heating needs.

The energy packages go beyond simple conservation measures. They specify framing and insulation details, window location, heating and cooling system design, appliance efficiency, lighting, water heating, shading, and ventilation. Many experts call homes built to these standards *high performance homes*. The features, costs, and energy savings of the different packages are compared in Table 2-6 and Table 2-7.

The energy efficient packages provide an excellent investment to the homeowner — the energy savings exceed the extra annual mortgage costs incurred to pay for the energy features from the first year on. Thus, even when considering the additional downpayment for the energy features, the investment pays off within two years -- and often during the first year.

The builder must pay special attention to all of the details for the Energy Packages. The remainder of this publication describes the materials and techniques required for successful construction of a high performance home.

Table 2-6
Economic Analysis of Energy Efficient Packages*

	Annual Energy Costs ($)			
	Code Home	Five-Star Home	Five-Star Plus	Passive Solar Home**
Heating	444	224	113	135
Cooling	563	290	183	320
Hot Water	396	366	171	220
Lighting	84	56	42	56
Other (Appliances; Service Charges)	356	321	289	321
Total	**1,843**	**1,258**	**798**	**1,052**
Annual Energy Savings		**585[1]**	**1,045[1]**	**791[1]**
Typical Additional Construction Costs		**2,466[1]**	**5,635[1]**	**5,466[1]**
Extra Mortgage ($/yr) (8% loan for 30 years)		**217[1]**	**496[1]**	**481[1]**
Payback Period (years)		**4.2**	**5.4**	**6.9**
Estimated Rate of Return (IRR)		**53%[1]**	**42%[1]**	**29%[1]**

* For a two-story, 2,000-square-foot home in Baton Rouge

** Includes extra cost of 5-Star Home features, additional south-facing glass, and thermal mass

[1] Compared to Code Home

Table 2-7
Energy Efficient Home Packages *

Home Energy Rating ---------->	Standard (Code) (80 pts)	Energy 1 (5-Star) (86 pts.)	Energy 2** (5-Star Plus) (92 pts)
Insulation & Infiltration Control			
Ceiling insulation	R-19	R-30	R-38
Cathedral ceiling insulation	R-19	R-25	R-30
Wall insulation (including sheathing)	R-11.5	R-15.5 to 16.6	R-21.5 to 25.6
Floor Insulation	None	R-19	R-19
Framing details	Standard	Energy efficient framing details	Energy efficient framing details
Moisture control	Minimal	Measures described in Chapter 1	Same as Energy 1
Infiltration control	Basic	Continuous Air Barrier System	Continuous Air Barrier System
Windows and Doors			
Windows	Single-glazed	Double-glazed, thermally insulated vinyl or wood	Double-glazed, low-emissivity
Doors	Wood	R-4 or better	R-4 or better
Heating, Cooling and Ventilation Systems			
Furnace (AFUE)	0.78	0.80	0.90
Heat pump (HSPF)	6.8	7.0	8.0
Air conditioner (SEER)	10.0	11.0	15.0
Ventilation	None	Upgraded spot ventilation with make-up air	Same as 5-Star Home
Thermostat	Standard	Programmable***	Programmable***
Ductwork	Standard — 15% leakage	Ducts sealed (max 3% leakage), R-6 insulation	Ducts located in conditioned space
Water Heating			
Water heater efficiency	Standard	Moderate efficiency	High efficiency
Water heating conservation	None	Low-flow showerheads, pipe insulation	Same as Energy 1
Lighting	12 Incandescent/ 3 Fluorescent/ Standard exterior	6 Incandescent/ 9 Fluorescent/ Efficient exterior	3 Incandescent/ 12 Fluorescent/ Efficient exterior
Appliances	Standard	Efficient cooking, refrigeration and clothes washing	All appliances efficient
Natural Cooling			
Overhang above south-facing windows	1/2 foot	2 feet	2 feet
Window shading treatments	None	Exterior shade screen on west windows	Exterior shade screen on south, east, and west

* Comparisons are based on a two-story, 2,000-square foot home.

** The Passive Solar Design package has the same energy conservation features as the Energy 2 package. In addition, the Passive Solar Design package has a solar water heater and special measures for collecting and storing solar heat in winter.

*** Make certain programmable thermostats are designed for the specific HVAC systems, especially for heat pumps.

Figure 2-1
Energy 1 Package
5-Star Home

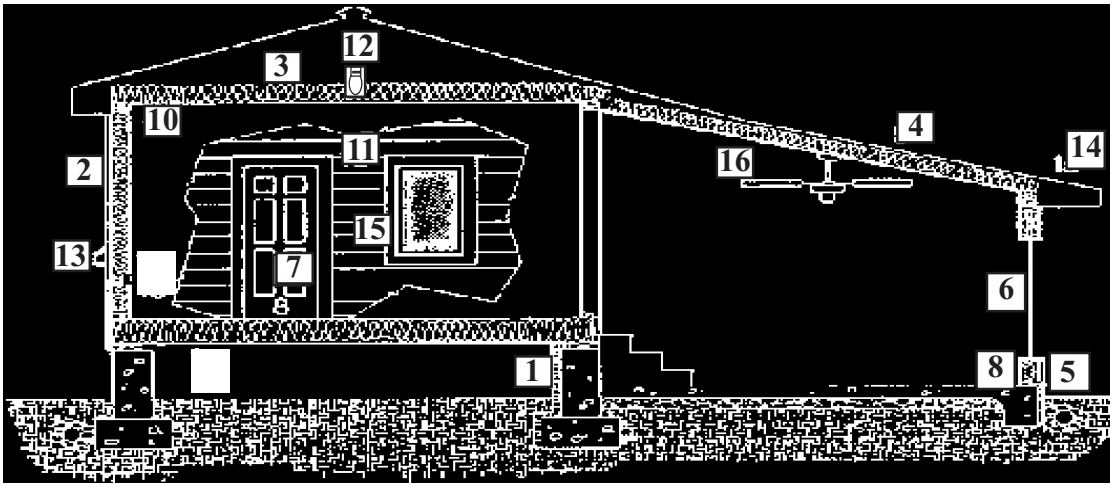

Energy 1 Package -- 5-Star Home

ENVELOPE

1. R-19 floor insulation over crawlspace or basement, or against crawlspace walls; no slab insulation until termite problems are solved.
2. 2x4 stud wall with R-13 insulation with no voids and 1/2-inch insulated sheathing; R-19 attic knee wall insulation.
3. R-30 attic insulation with adequate ventilation.
4. R-25 cathedral ceiling insulation with adequate ventilation.
5. Complete insulation coverage between all conditioned and unconditioned areas.

WINDOW AND DOOR

6. Double-glazed windows with wood frames or metal with thermal breaks; maximum infiltration rating of 0.30 cfm per foot of operable sash; minimize east and west windows; avoid skylights.
7. R-4 or better insulated exterior doors with a maximum infiltration rating of .5 cfm per square foot of door area; front door may be solid wood.

AIR TIGHT / VENTILATE RIGHT

8. Seal under bottom plate in conditioned area; seal all wiring, plumbing, and ductwork penetrations.
9. If fireplaces are used, all have tight fitting glass doors, outside combustion air, and flue dampers; seal between framing and chimney with noncombustible firestopping.
10. Use continuous air barrier system, as described in Chapter 4.
11. Seal rough openings for windows and doors with non-expanding foam sealant.
12. Recessed lights must be UL-approved IC (insulation contact) fixtures; they must also be airtight -- rated for less than 2 cubic feet per minute of air leakage under test conditions. Seal bypasses through chases, dropped soffits, stairwells, split levels, and tongue-in-groove ceilings.
13. Exhaust fans have low sone ratings for sound and deliver 50 cfm per bathroom and 100 cfm in the kitchen; all fans are vented to the outside (not into the attic) and can be controlled with a timer switch. Install dampered fresh air make-up air duct into HVAC system.

NATURAL COOLING

14. Shade south windows with 2-foot overhang or solar shading treatments.
15. Shade southwest and west windows with solar shade screens, awnings, interior roller blinds, reflective coatings, or landscaping.
16. Install ceiling fans in frequently used rooms, including bedrooms.

HEATING AND COOLING

17. Air conditioner has SEER of 11 to 12.
18. Heat pump has minimum HSPF of 7 and minimum SEER of 11.
19. Furnace has minimum AFUE of .80.
20. System and ductwork sized and designed by a qualified professional; system charged properly.
21. Minimize ductwork in unconditioned areas; insulate ductwork to R-4.3 in conditioned spaces (minimum R-6 in unconditioned spaces).
22. Programmable thermostat designed for specific equipment and located properly.

DOMESTIC HOT WATER

23. Moderate efficiency water heater with foam insulation; if electric water heater, consider using a heat pump water heater or desuperheater.
24. Install low-flow showerheads; insulate first four feet of all water pipe from water heater; set thermostat at 120° F; install heat traps on piping to eliminate convective loops. Insulate all exposed water piping for freeze protection.

APPLIANCES AND LIGHTING

25. Moderate energy efficient refrigerator, dishwasher, range, washer, dryer, and television.
26. Fluorescents used for area lighting in rooms; high intensity discharge lamps (high pressure sodium or metal halide) for exterior lighting.

FRAMING DETAILS

27. Limit blocking in exterior 2x4 walls.
28. Use let-in bracing and insulated sheathing in place of plywood sheathing in corners.
29. Use energy efficient details instead of boxed corners or partition wall intersections.
30. Install 1/2-inch rigid insulation in place of plywood in headers.
31. Frame roof to provide clearance at eaves for R-30 (R-38 in north Louisiana) insulation and a one-inch ventilation space above.

Comparing 5-Star Home to Code Home (2,000 square feet in Baton Rouge)	
Extra Construction Costs	$2,466
Additional Cost on Annual Mortgage (8% for 30 years)	$217
Annual Energy Savings	$585
Annual Internal Rate of Return	53%

Figure 2-2
Framing Details

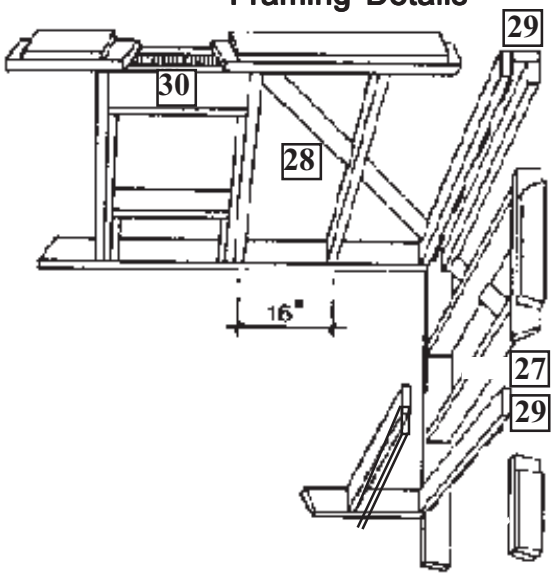

Raised Rafter Framing

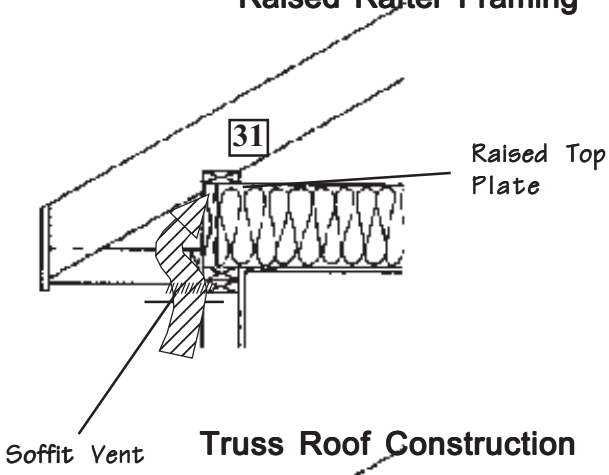

Truss Roof Construction

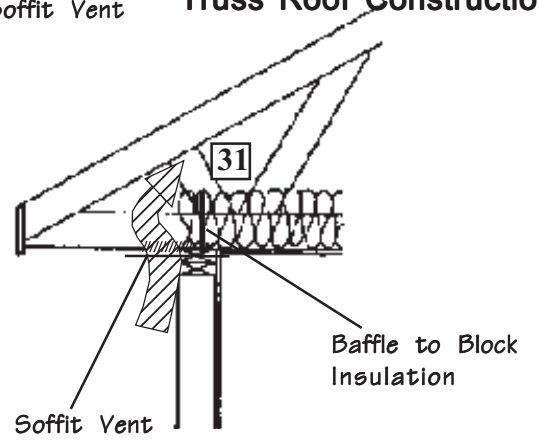

Figure 2-3
ENERGY 2 Package
5-Star Plus Home

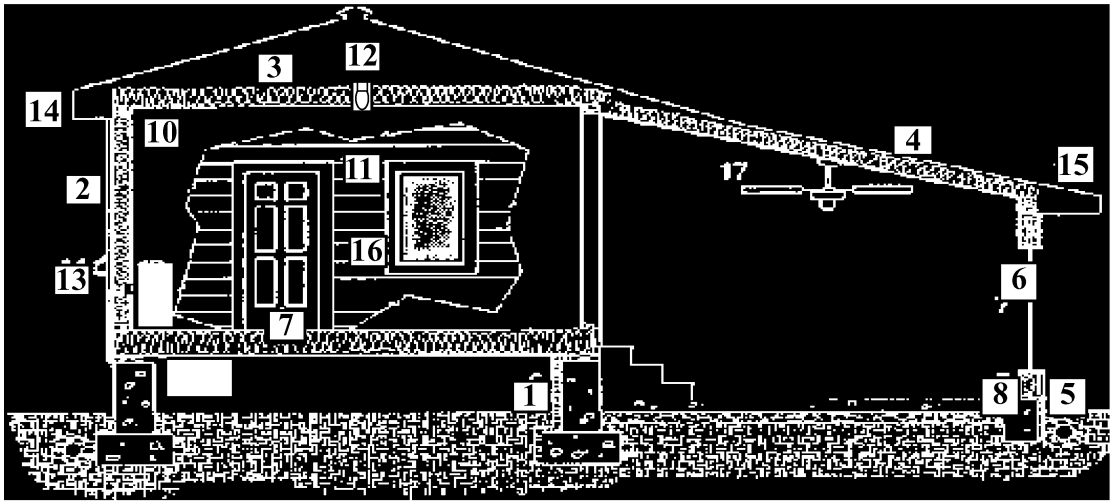

Energy 2 Package -- 5-Star Plus Home

(Items below in bold type are changes from Energy 1)

ENVELOPE

1. R-19 floor insulation over crawlspace or basement, or against crawlspace walls; no slab insulation until termite problems are solved.
2. **2x6** stud wall with **R-19** to **R-21** insulation installed with no voids and 1/2-inch insulated sheathing if justified by economic analysis (See pages 84-85.); R-19 knee wall insulation **with radiant heat barrier backing; R-30 sealed band joist.**
3. **R-38 attic insulation or** R-30 attic insulation **with radiant heat barrier.**
4. **R-30 cathedral ceiling insulation or R-24 insulation with radiant heat barrier.**
5. Complete insulation coverage between all conditioned and unconditioned areas.

WINDOW AND DOOR

6. Double-glazed**, low-emissivity, inert gas-filled windows** with a maximum infiltration rating of **0.20** cfm per foot of operable sash. Minimize east and west windows; avoid skylights.
7. R-4 insulated exterior doors. Double weather-stripping and energy efficient thresholds; door infiltration rating less than 0.35 cfm per linear foot. Front door may be built of solid wood.

AIR TIGHT / VENTILATE RIGHT

8. Seal under bottom plate in conditioned area, seal all wiring, plumbing, and ductwork penetrations and all other bypasses in the building envelope.
9. If fireplaces are used, all have tight fitting glass doors, outside combustion air, and dampers.
10. Install continuous air barrier (see Chapter 4).
11. Seal rough openings for windows and doors with non-expanding foam sealant.
12. Recessed lights must be UL approved IC (insulation contact) fixtures; they must also be airtight—rated for less than 2 cubic feet per minute of air leakage under test conditions.
13. Provide tight-fitting dampers for exhaust vents.
14. Exhaust fans have low sone ratings for sound and deliver 50 cfm per bathroom and 100 cfm in the kitchen; all fans are vented to the outside (not into the attic) and can be controlled with a timer switch. Install ventilation system with heat and moisture recovery equipment.

NATURAL COOLING

15. Shade south windows with 2-foot overhang or solar shading treatment.
16. Shade **south, southeast, east**, southwest, and west windows with solar shade screens, awnings, interior roller blinds, reflective coatings, or landscaping.
17. Install ceiling fans in frequently used rooms.

HEATING AND COOLING

18. Homes with slab-on-grade and no slab insulation Air conditioner has a minimum **SEER of 15.0;** Heat pump has a minimum **HSPF of 8.0** and minimum **SEER of 15.0.**
19. Homes with insulated floors over unconditioned spaces or open air--Air conditioner has minimum **SEER of 13.0**; Heat pump has minimum **HSPF of 7.8** and minimum **SEER of 13.0.**
20. Furnace has minimum **AFUE of .90.**
21. System sized properly and ducts designed by a professional and sealed with mastic.
22. **No ductwork in unconditioned areas;** insulate ductwork to R-4.3 in conditioned spaces (minimum R-6 in unconditioned spaces).
23. Programmable thermostat designed for specific equipment and located properly.

DOMESTIC HOT WATER

24. **High efficiency** water heater:
    Fuel-fired — **Energy Factor exceeds 0.80**
    Electric — **heat pump water heater, desuperheater, or solar water heater.**
25. Install low-flow showerheads; insulate first four feet of all water pipes from water heater; set thermostat at 120° F; install heat traps on water heater piping to eliminate convective loops.

APPLIANCES AND LIGHTING

26. **Moderate to high efficiency** refrigerator, dishwasher, range,clothes washer, dryer, televisions, computer equipment.
27. Fluorescents used for area lighting in rooms
28. High intensity discharge lamps (high pressure sodium or metal halide) for exterior lighting.

FRAMING DETAILING

29. Limit blocking in exterior walls.
30. **Use single top plate,** if possible.
31. **Consider using framing alternatives for window and door jambs.**
32. Use let-in bracing and insulated sheathing in place of plywood sheathing in corners.
33. Use energy efficient details instead of boxed corners or partition wall intersections.
34. **Insulate boxed header.**
35. Frame roof to provide clearance at eaves for R-30 insulation and a one-inch ventilation space above.

Figure 2-4
Framing Details

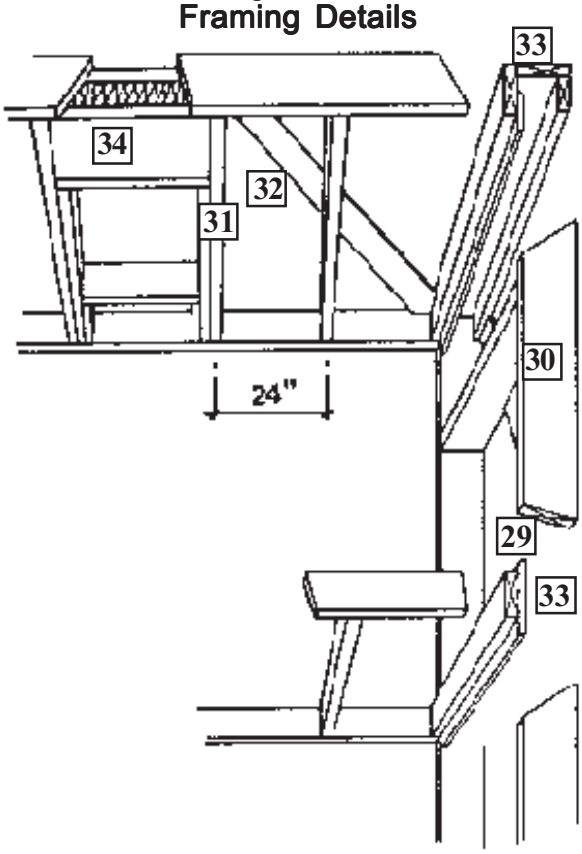

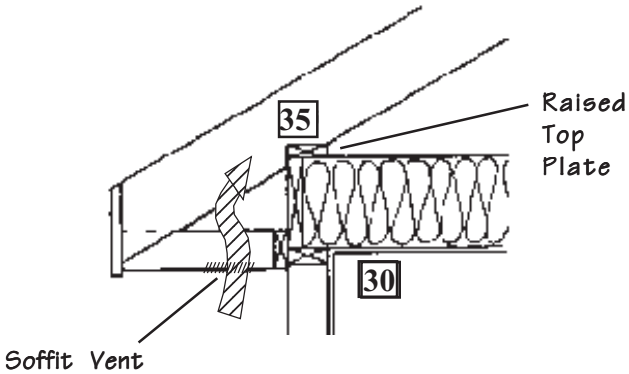

Comparing 5-Star Plus Home to Standard Home (2,000 square feet in Baton Rouge)	
Extra Construction Costs	$5,635
Additional Cost on Annual Mortgage (8% for 30 years)	$496
Annual Energy Savings	$1,045
Annual Internal Rate of Return	42%

PASSIVE SOLAR DESIGN

Passive solar design can be used with any style home. The design guidelines are simple and offer great flexibility. Properly designed passive solar homes provide comfort and energy savings at an affordable price. However, poorly planned homes can suffer from overheating, large temperature swings, and excessive glare.

Figure 2-5
Passive Solar Design

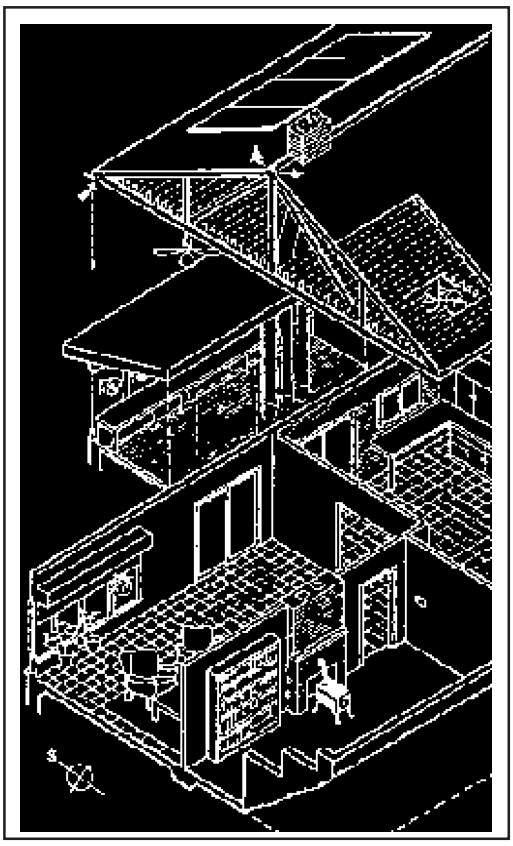

Elements of Passive Solar Design

1. **Energy Conservation Measures**—use an energy package such as 5-Star or 5-Star Plus.

2. **South-facing Windows** — let in 2 1/2 times more sunlight in winter and 2 1/2 times less in summer than east- and west-facing windows. Consider the increased comfort and energy savings that low-emissivity windows offer as explained in Chapter 6. See the chart below for sizing passive solar windows.

3. **Thermal Storage Mass** — tile-covered slab floors, masonry walls, water-filled containers, as well as conventional building materials and interior furnishings store heat and save energy in both summer and winter. The amount of mass needed for south windows is: 1.0 cubic foot (140 pounds) of masonry or 0.5 cubic foot (3.75 gallons) of water per square foot of south glass area over 7 percent of floor area.

4. **Heat Distribution Measures**—Open floor plans, vents, fans, and other measures help move solar-heated air between rooms in the building. Keep air distribution plans simple.

5. **Window Shading**—Overhangs, balconies, awnings, solar screens, and trees shade windows in summer.

6. **Ventilation**—Natural ventilation, ceiling fans, whole house fans, and space fans keep the house more comfortable in spring and fall. In summer, whole house fans may provide comfort, but often contribute too much humidity.

7. **Solar Water Heating**—Use the sun to provide part of the home's hot water needs.

Table 2-8
Sizing South Window Area for Passive Solar Homes
(Based on type of south window shading; expressed as percentage of floor area)*

	Unshaded	Overhang	Awning or Shade Screen	Shade Screen and Movable Insulation
Direct gain	0-5	5-12	5-16	5-20
Sunspace/solar greenhouse	5-10	5-20	5-25**	5-30

*For example, a 2,000-square-foot passive solar home with unshaded south glass should have at most 5% -- (0.05 * 2,000 = 100 square feet) of windows. If the direct gain area has solar shade screen, then the south glass area can increase to 16% of the floor area.

**If the area of south-facing glazing for a sunspace or solar greenhouse will exceed 20 percent of the floor area of the home, then it must be isolated from the rest of the house and not be air conditioned.

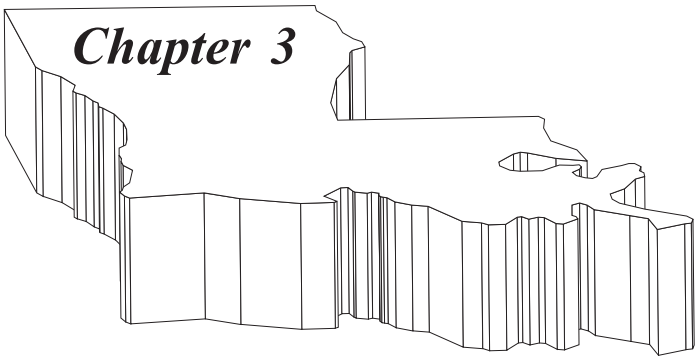

The House As A System

We sometimes think of our homes as independent structures, placed on an attractive lot, and lived in without regard to the world around. Yet, most homes have problems — some minor nuisances, others life-threatening:

- ❒ Mold on walls, ceilings, and furnishings
- ❒ Mysterious odors
- ❒ Excessive heating and cooling bills
- ❒ High humidity
- ❒ Rooms that are never comfortable
- ❒ Decayed structural wood and other materials
- ❒ Termite or other pest infestations
- ❒ Fireplaces that do not draft properly
- ❒ High levels of formaldehyde, radon, or carbon monoxide

These problems occur because of the failure of the home to properly react to the outdoor or indoor environment. The house should be designed to function well amid fluctuating temperatures, moisture levels, and air pressures. Quality builders are concerned about these problems, but are not always certain what steps to take to prevent them. They must start by considering what makes buildings healthy and comfortable.

Health and Comfort

The following factors define the quality of the living environment. If kept at desirable levels, the house will provide comfort and healthy air quality.

- ❒ Moisture levels — often measured as the relative humidity (RH). High humidity causes discomfort and can promote growth of mold and organisms such as dust mites
- ❒ Temperature — both dry bulb (that measured by a regular thermometer) and wet bulb, which indicates the amount of moisture in the air. The dry bulb and wet bulb temperatures can be used to find the relative humidity of the air
- ❒ Air quality — the level of pollutants in the air, such as formaldehyde, radon, carbon monoxide, and other detrimental chemicals, as well as organisms such as mold and dust mites. The key determinant of air quality problems is the strength of the source of pollution
- ❒ Air movement — the velocity at which air flows in specific areas of the home. Higher velocities make occupants more comfortable in summer, but less comfortable in winter
- ❒ Structural integrity — the ability of the materials that make up the home to create a long-term barrier between the exterior and inside

CONCEPTS

Heat Flows in Homes

Heat transfer — heat loss and heat gain — between a home and its exterior envelope has a major impact on health and comfort. The sidebar explains the three primary modes of heat transfer.

When building energy efficient homes, many builders focus on reducing conduction heat gain and loss by installing more insulation. However, as shown in Table 3-1, air leakage and duct leakage are serious contributors to heating and cooling bills. They can also create moisture and indoor air quality problems. Unfortunately, many homes labeled as energy efficient have no provisions for sealing air leaks or duct leaks.

In summer, cooling needs are driven by the location and shading of windows. Also, the percentage of the cooling load that is for *latent cooling* (humidity removal) can increase substantially in homes with well insulated thermal envelopes. The major sources of moisture include cooking activities, human respiration and perspiration, and infiltration of hot, humid, exterior air. Therefore, tighter homes can be less humid in summer.

Table 3-1
Contributors to Heating and Cooling Bills in a Typical Home
(% of Total Energy Bill for Typical New Homes)*

	Heating	Cooling
Ceiling	4-8%	4-8%
Walls	5-9%	4-6%
Windows	9-12%	4-7%
Floors	5-9%	0-2%
Air Leaks (including humidity gain)	30-40%	20-30%
Duct Leaks	10-30%	10-30%
Solar Gain		10-15%
Internal Gain		3-6%
Latent Cooling		20-35%

* Percentages will vary according to the local climate, choice of energy source, and building design.

Figure 3-1
How Heat Moves

Conduction

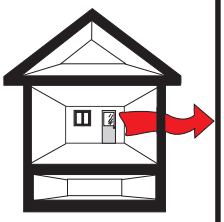

- The transfer of heat through solid objects, such as the ceiling, walls, and floor of a home.
- Insulation (and multiple layers of glass in windows) reduce conduction losses.

Convection

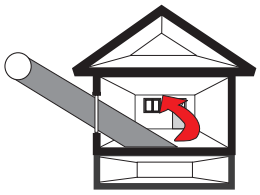

- The flow of heat by currents of air.
- As air becomes heated, it rises; as it cools, it becomes heavier and sinks.
- The convective flow of air into a home is known as *infiltration*; the outward flow is called *exfiltration*. In this publication, infiltration and exfiltration are known together as *air leakage.*

Radiation

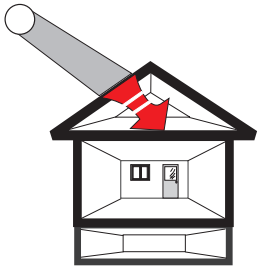

- The movement of energy in waves from warm to cooler objects across empty spaces.
- Examples include radiant heat traveling from:
  - inner panes of glass to outer panes in double-glazed windows in winter.
  - roof deck to attic insulation during hot, sunny days.
- Can be minimized by installing reflective barriers; examples include radiant heat barriers in attics and low-emissivity coatings for windows.

Air Leaks and Indoor Air Quality

Both building professionals and homeowners have concerns about indoor air quality. It is important to understand that few studies on the subject have shown a strong relationship between indoor air quality and the air tightness of a home.

The major factor affecting indoor air quality is the level of the pollutant causing the problem. Thus, most experts feel that the solution to poor indoor air quality is removing the source of the pollution. Building a leakier home may help lessen the intensity of the problem, but it will neither eliminate it, nor necessarily create a healthy living situation.

Air leaks often bring in air quality problems from outside, such as:

- ❒ Mold from crawlspaces and outdoors
- ❒ Radon, while rare in Louisiana, entering from crawlspaces and under-slab areas
- ❒ Humidity from crawlspaces and outdoor air
- ❒ Pollen and other allergens from outdoor air
- ❒ Dust and other particles from crawlspaces and attics

The best solution to air quality problems is to build a home as tightly as possible and install an effective ventilation system that can bring in fresh, filtered outside air (not crawlspace or attic air) under the control of the homeowner.

Figure 3-2
Air Quality Problems from "Fresh" Air

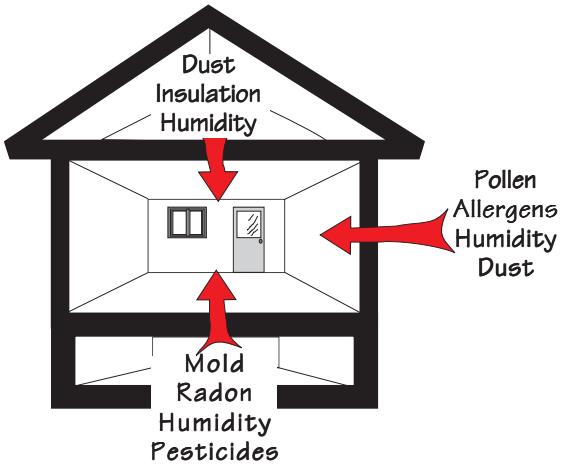

Figure 3-3
Conditions for Condensation

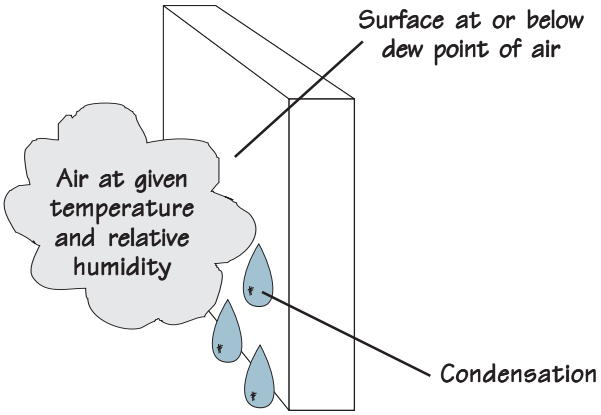

How Condensation Occurs

Air is made up of gases such as oxygen, nitrogen, and water vapor. The amount of water vapor that air can hold is determined by its temperature. Warm air can hold more vapor than cold air. The amount of water vapor in the air is measured by its relative humidity. At 100% RH, water vapor condenses into a liquid. The temperature at which water vapor condenses is its dewpoint.

$$RH = \frac{\text{the amount of water vapor in the air at a given temperature}}{\text{the maximum amount of water vapor that air can hold at that temperature}}$$

The dew point of air depends on its temperature and relative humidity. A convenient tool for examining how air, temperature and moisture interact is the Psychometric Chart, explained in the sidebar *Understanding Relative Humidity.*

Preventing condensation involves reducing the RH of the air, increasing the temperatures of surfaces exposed to moist air, and blocking the flow of moisture using air barriers and vapor barriers. However, builders should also allow spaces that might trap moisture to have drying potential — the ability to shed or reject moisture.

MOISTURE AND RELATIVE HUMIDITY

A psychometric chart aids in understanding the dynamics of moisture control. A simplified chart shown in Figure 3-4 relates temperature and moisture. Note that at a single temperature, as the amount of moisture increases (moves up the vertical axis), the relative humidity of the air also increases. At the top curve of the chart, the relative humidity reaches 100% — air can hold no additional water vapor at that temperature, called the *dew point*, so condensation can occur.

Winter Condensation in Walls

In a well built wall, the temperature of the inside surface of the sheathing will depend on the insulating value of the sheathing and the indoor and outdoor temperatures.

Example: When it is 35°F outside and 70°F at 40% relative humidity inside:

- ❑ The interior surface of plywood sheathing will be around 39°F.
- ❑ The interior surface of insulated sheathing would be 47°F.

The psychometric chart can help predict whether condensation will occur:

1. In Figure 3-5, find the point representing the indoor air conditions.
2. Draw a horizontal line to the 100% RH line.
3. Next, draw a vertical line down from where the horizontal line intersects the 100% RH line.

In the example, condensation would occur if the temperature of the inside surface of the sheathing were at 44°F. Thus, under the temperature conditions in this example, water droplets may form on the plywood sheathing, but not on the insulated sheathing.

Summer Condensation in Walls

Figure 3-6 depicts a similar case in summer. If the interior air is 75°F, and outside air at 95°F and 40% relative humidity enters the wall cavity, will condensation occur on the exterior side of the drywall, which would be about 73°F? Using the psychometric chart, we find that the dew point of the outside air leaking into the wall cavity would be about 67°F. Since the drywall temperature is greater than the dew point, condensation should not form.

Figure 3-4
Psychometric Chart

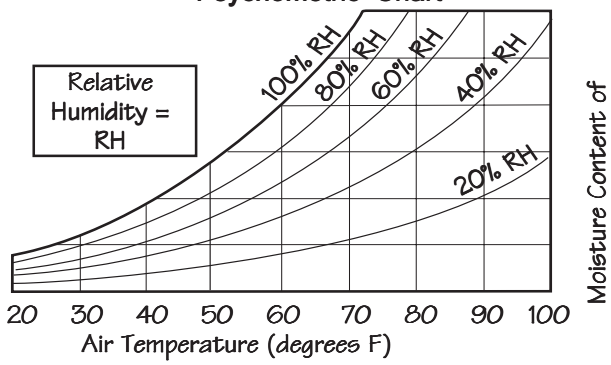

Figure 3-5
Winter Dewpoint Temperature Inside Walls

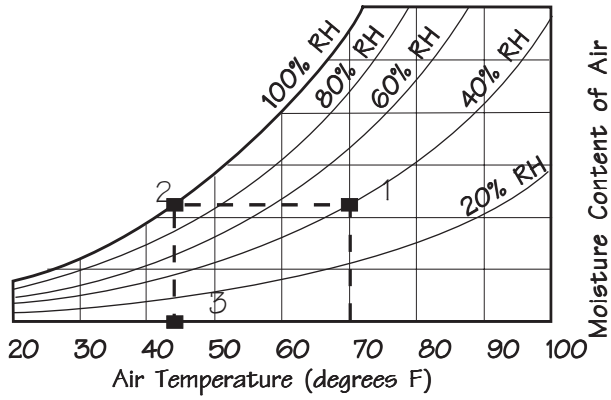

Figure 3-6
Summer Dewpoint Temperature Inside Walls

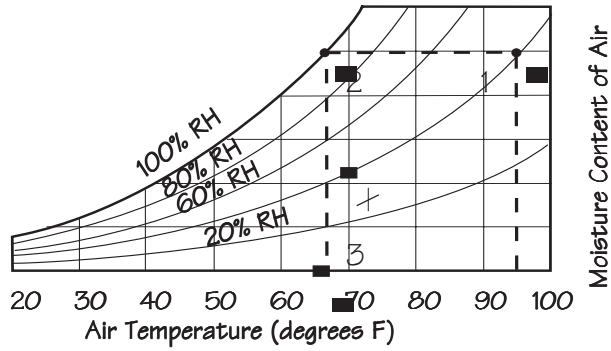

Affect of Relative Humidity

Humans respond dramatically to changes in relative humidity (RH):

- At lower RH, we feel cooler as moisture evaporates more readily from our skin.
- At higher levels, we may feel uncomfortable, especially at temperatures over 78 degrees.
- Dry air can often aggravate respiratory problems.
- Mold and fungi grow in air over 70% RH.
- Dust mites prosper at over 50% RH.
- Wood decays when the RH is near or at 100%.
- Humans are most comfortable at 40% to 60% RH.

Figure 3-7 shows that relative humidities in the 40% to 60% range accomplish two major goals: provide human comfort and minimize the many diverse negative impacts that occur in drier and more humid air. By controlling air leakage and properly designing HVAC systems, relative humidities should remain at desirable levels.

Figure 3-7
Relative Humidity Ranges

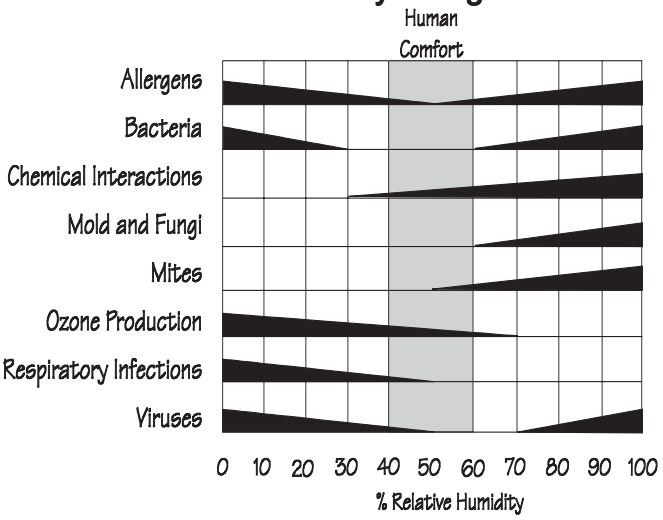

Systems in a Home

Whether the health and comfort factors of temperature, humidity, and air quality remain at comfortable and healthy levels depend on how well the home works as a system. Every home has systems that are intended to provide indoor health and comfort:

- Structural system
- Moisture control system
- Air barrier system
- Thermal insulation system
- Comfort control system

Structural System

The purpose of this book is not to show how to design and build the structural components of a home, but rather to describe how to maintain the integrity of these components. Key problems that can affect the structural integrity of a home include erosion, roof leaks, water absorption into building systems, excessive relative humidity levels, fire, and summer heat buildup.

Structural recommendations

To prevent these structural problems, the home designer and builder should:

- Ensure that the footing is installed level and below the frost line. Use adequate reinforcing and make sure concrete has the proper slump and strength.
- Divert ground water away from the building through a properly designed and installed foundation drainage system and effective gutters, downspouts, and rain water drains.
- Build a quality roof and thorough exterior flashing to prevent rainwater intrusion. Install a "drainage plane" that sheds water outside (Figure 3-9).
- Seal penetrations that allow moisture to enter the building envelope via air leakage. Use firestopping sealants to close penetrations that are potential sources of "draft" during a fire. Install baffles in attics to prevent air from washing over insulation.
- Install a series of capillary breaks that keep moisture from migrating through foundation systems into wall and attic framing.

Figure 3-8
Bulk Moisture Transport

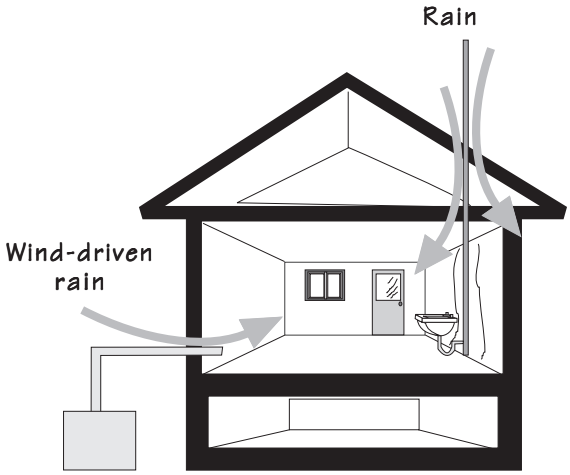

Figure 3-9
Drainage Plane

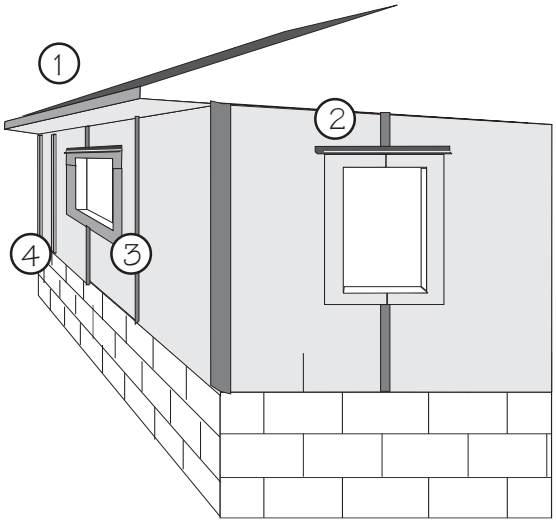

1. Design and build durable roof with modest overhang.
2. Carefully flash around windows, doors, and other openings.
3. Tape or caulk joints in foam sheathing to prevent rain or water penetration.
4. In homes with considerable rainfall, install furring strips between wall sheathing and siding to create a moisture-ventilating air space that allows water to drain.

Moisture Control System

Homes should be designed and built to provide comfortable and healthy levels of relative humidity. They should also prevent both liquid water and water vapor from migrating through building components.

An effective moisture control system includes quality construction to shed water from the home and its foundation, vapor and air barrier systems that hinder the flow of water vapor, and heating and cooling systems designed to provide comfort all year.

There are four primary modes of moisture migration into our homes. Each of these must be controlled to preserve comfort, health, and building durability.

Bulk moisture transport

- ❒ The flow of moisture through holes, cracks, or gaps
- ❒ Primary source is rain and groundwater
- ❒ Causes include:
  - ❍ poor flashing
  - ❍ inadequate drainage
  - ❍ poor quality weatherstripping or caulking around joints in building exterior (such as windows, doors, and bottom plates)
- ❒ To solve, install a building drainage plane:
  - ❍ no roof leaks; gutters connected to drain system carry roof water away from foundation
  - ❍ walls built with continuous drainage plane (see Figure 3-9)
  - ❍ high quality weatherstripping or caulking around joints in building exterior (such as windows, doors, and bottom plates)
  - ❍ all openings through wall — for windows, doors, plumbing, lighting, etc. — well flashed and sealed to prevent rain penetration
  - ❍ soil sloped away from home to divert ground water from foundation
  - ❍ foundation wall waterproofed and provided with a drainage system — gravel or a gravity-drain membrane
  - ❍ foundation drain, preferably located beside the footing, to carry water away from the house

Capillary action

- ❒ Wicking of water through porous materials or through small cracks.
- ❒ Primary sources are from rain or ground water.
- ❒ Causes include:
  - ❍ water seeping between overlapping pieces of exterior siding
  - ❍ water drawn upward through pores or cracks in concrete slabs
  - ❍ water migrating from crawlspaces into attics through foundation walls and wall framing
- ❒ Solved by completely sealing pores or gaps, increasing the size of the gaps (usually to a minimum of 1/8 inch), or installing a waterproof, vapor barrier material to form a capillary break.
- ❒ The foundation system should include a drain pipe surrounded by a gravel bed covered by a filter fabric to prevent dirt from stopping up the gravel. In addition, install a layer of 10-mil polyethylene under concrete slabs and footings. Use sill sealer between concrete foundation walls and sill plates.
- ❒ Lapped siding should be primed on the back. In addition, the wall system should have an air space behind the siding and a continuous drainage plane behind the air space, such as 30-pound roofing felt installed shingle style.

Figure 3-10
Capillary Action

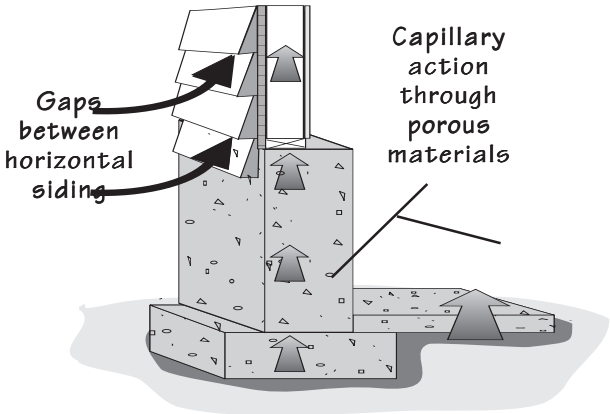

Air transport

- ❒ Unsealed penetrations and joints between conditioned and unconditioned areas allow air containing water vapor to flow into enclosed areas. As shown in Figure 3-11, air transport can bring 50 to 100 times more moisture into wall cavities than vapor diffusion.
- ❒ Primary source is water vapor in air.
- ❒ Causes include air leaking through holes, cracks, and other leaks between:
  - ❍ interior air and enclosed wall cavities
  - ❍ interior air and attics
  - ❍ exterior air and interior air, adding humidity to interior air in summer
  - ❍ crawlspaces and interior air
- ❒ Solved by creating an Air Barrier System.

Figure 3-11
Typical Water Vapor Transport
(100 sq ft Wall Without a Vapor Barrier)

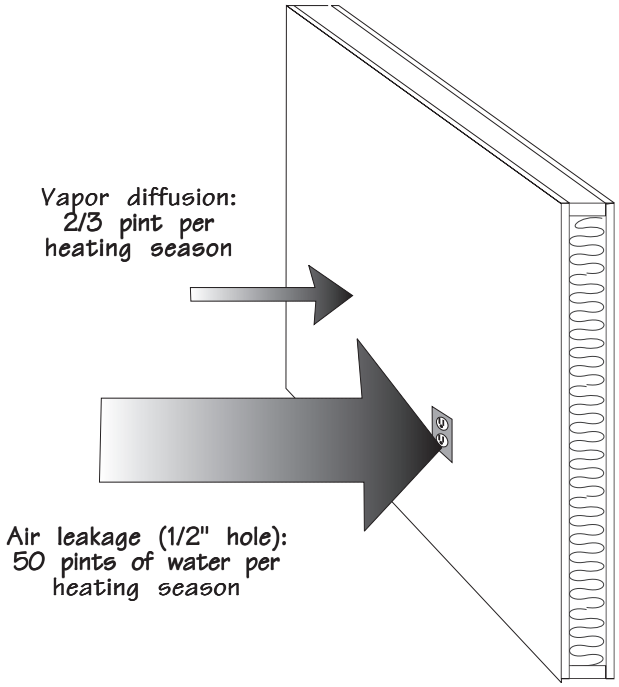

MOISTURE PROBLEM EXAMPLE

The owner of a residence complains that her ceilings are dotted with mildew. On closer examination, an energy auditor finds that the spots are primarily around recessed lamps located close to the exterior walls of the building.

What type of moisture problem may be causing the mildew growth, which requires relative humidities over 70%? In reality, any of the forms of moisture transport could cause the problem:

Bulk moisture transport — the home may have roof leaks above the recessed lamps.

Capillary action — the home may have a severe moisture problem in its crawlspace or under a slab. Via capillary action, moisture travels up the slab, into the framing lumber, and all the way into the attic. If the attic air becomes sufficiently moist, it may condense on the surface of the cool roof deck and drip onto the insulation and drywall below.

Air transport — most recessed lamps are quite leaky; if the air leaking into the attic is relatively warm and moist, and the roof deck is cool, the water vapor in the air may condense and drip onto the drywall. *This is the most likely explanation.*

Vapor diffusion — the home's ceiling may not have an adequate vapor barrier in the vicinity of the recessed lamps, resulting in excessive vapor flow into the attic. Although this situation is highly unlikely in Louisiana, the true cause may be a combination of the above problems.

Figure 3-12
Bulk Moisture Transport

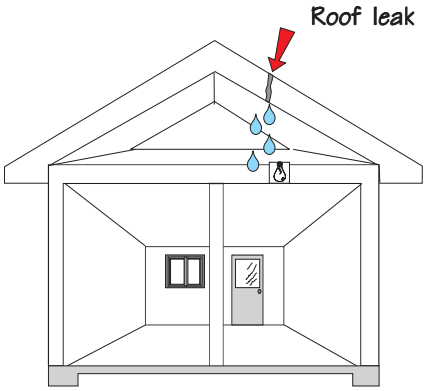

Figure 3-13
Capillary Action

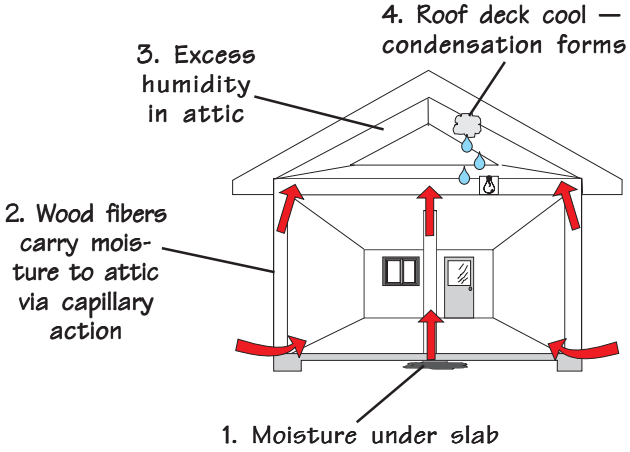

Figure 3-14
Air Transport

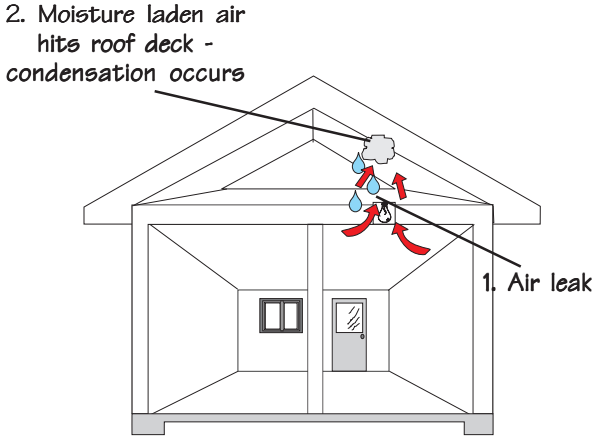

Figure 3-15
Vapor Diffusion

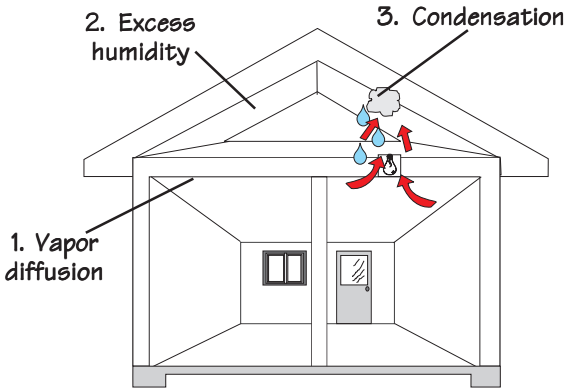

Vapor diffusion

- ❒ Water vapor in air moves through permeable materials — those with Perm ratings of over 1.
- ❒ Primary source is water vapor in the air.
- ❒ Causes:
  - ❍ interior moisture permeating wall and ceiling finish materials
  - ❍ exterior moisture moving into the home in summer
  - ❍ moist crawlspace air migrating into the home
- ❒ Solved by proper installation of a vapor barrier. However, interior vapor barriers are not recommended in Louisiana. Winters are mild so interior vapor barriers are not necessary; exterior sheathing materials usually serve as partial vapor barriers in summer. Wall systems without interior vapor barriers can dry to the inside of the home.

Table 3-2
Perm Ratings of Different Materials

Aluminum foil (.35 mil)	0.05
Polyethylene plastic (6 mil)	0.06
Plastic-coated insulated foam sheathing	under 0.30
Asphalt-coated paper backing on insulation	0.40
Vapor barrier paint or primer	0.45
Plywood with exterior glue	0.70
Drywall (unpainted)	50.0

Figure 3-16
Drying to the Interior

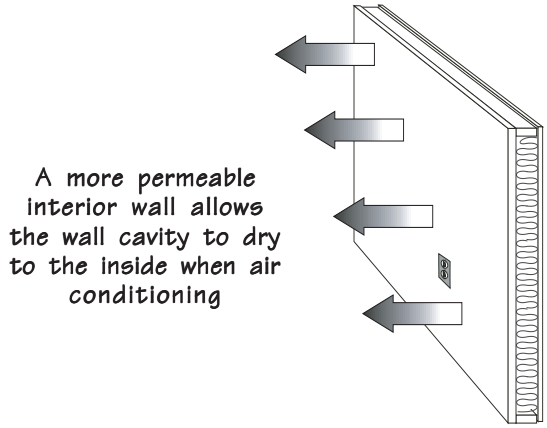

Air Barrier System

Air leakage can be detrimental to the long term energy efficiency and durability of homes. It can also cause many other problems, including:

- ❒ High humidity in summer and dry air in winter
- ❒ Allergy problems
- ❒ Radon entry via leaks in the floor system
- ❒ Mold growth
- ❒ Drafts
- ❒ Window fogging or frosting
- ❒ Excessive heating and cooling bills
- ❒ Increased damage in case of fire

An air barrier system may sound formidable, but it is actually a simple concept — seal all leaks between conditioned and unconditioned spaces with durable materials. Achieving success can be difficult without diligent efforts, particularly in homes with multiple stories and changing roof lines.

Air barriers may also help a home meet local fire codes. One aspect of controlling fires is preventing oxygen from entering a burning area. Most fire codes have requirements to seal air leakage sites.

There are a number of air barrier systems — all can be effective with proper installation. They are one of the key features of an energy efficient home. The basic approach is:

- ❒ Seal all air leakage sites between conditioned and unconditioned spaces:
  - ❍ caulk or otherwise seal penetrations for plumbing, electrical wiring, and other utilities.
  - ❍ seal junctions between building components, such as bottom plates and band joists between conditioned floors.
  - ❍ consider using insulation that also air seals, such as foam or densely packed cellulose or rock wool.
- ❒ Seal bypasses — hidden chases, plenums, or other air spaces through which attic or crawlspace air leaks into the home.
- ❒ Install a continuous air barrier system such as the Airtight Drywall Approach or exterior housewrap that is vapor permeable and sealed properly.

Figure 3-17
Air Barrier System Requirements

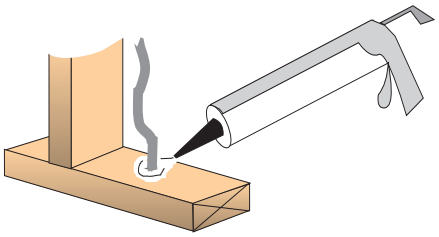

Seal all penetrations

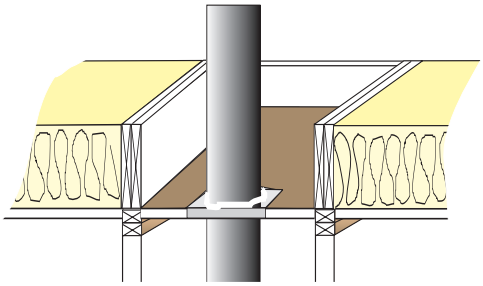

Seal bypasses at attic floor and crawlspace/ unheated basement ceiling

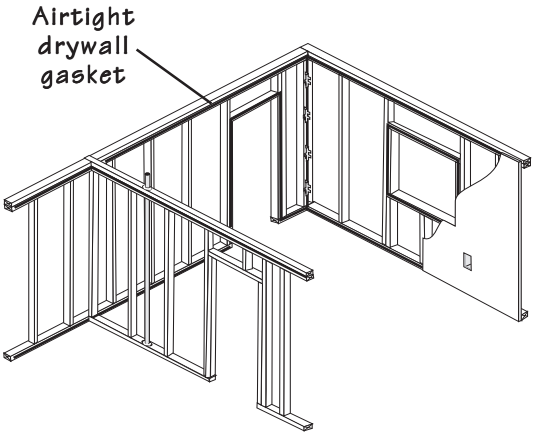

Install continuous air barrier system

Thermal Insulation System

Thermal insulation and energy efficient windows are intended to reduce heat loss and gain due to conduction. As with other aspects of energy efficient construction, the key to a successfully insulated home is quality installation.

Substandard insulation not only inflates energy bills, but may create comfort and moisture problems. Key considerations for effective insulation include:

- ❑ Install R-values equal to or exceeding the 2000 International Energy Conservation Code.
- ❑ Do not compress insulation.
- ❑ Provide full insulation coverage of the specified R-value; gaps dramatically lower the overall R-value and can create areas subject to condensation.
- ❑ Prevent air leakage through insulation — in some insulation materials, R-values decline markedly when subject to cold or hot air leakage.
- ❑ Air seal knee walls and other attic wall areas and insulate with a minimum of R-19 insulation.
- ❑ Support insulation so that it remains in place, especially in areas where breezes can enter or rodents may reside.
- ❑ Consider installing a radiant heat barrier; especially in homes whose roofs receive sunlight in the summer and have less then R-30 insulation.

Comfort Control System

The heating, ventilation, and air conditioning (HVAC) system is designed to provide comfort and improved air quality throughout the year, particularly in winter and summer. Energy efficient homes, especially passive solar designs, can reduce the number of hours during the year when the HVAC systems are needed.

These systems are sometimes not well designed nor installed to perform as intended. As a consequence, homes often suffer higher heating and cooling bills and more areas with discomfort than necessary. Poor HVAC design can also lead to moisture and air quality problems.

One major issue concerning HVAC systems is their ability to create pressure imbalances in the home. The sidebar on the next page shows that duct leaks can create serious problems. In addition, even closing a few doors can create situations that may endanger human health.

Pressure imbalances can increase air leakage, which may draw additional moisture into the home. Proper duct design and installation helps prevent pressure imbalances from occurring.

HVAC systems must be designed and installed properly, and maintained regularly by qualified professionals to provide continued efficient and healthy operation.

Creating Boundaries

In the field of building science, the term boundary has been applied to an external barrier created to control moisture, air leakage, and thermal conduction losses and gains. Every successful energy efficient home should have a moisture boundary, air leakage (pressure) boundary, and thermal boundary that separate unconditioned areas of the home from areas with heating or cooling.

In Figure 3-18, two different boundaries are shown for homes identical in shape and size. The boundary in Figure 3-18A, which depicts standard construction, is smaller than the boundary in Figure 3-18B. However, it is also more complicated. Boundary B is simpler because it incorporates virtually the entire home's exterior. One advantage of Boundary B is that the ductwork is all located within the sealed insulated envelope of the home. In Boundary A, the ducts must be sealed and insulated as they are part of the boundary.

The designer and builder must direct the subcontractors about how to install continuous air and ductwork sealing materials, insulation, moisture retarders, drainage systems, and other building materials. The air quality and durability of a home depend vitally on how well these boundaries are installed and maintained.

Figure 3-18
Residential Boundaries

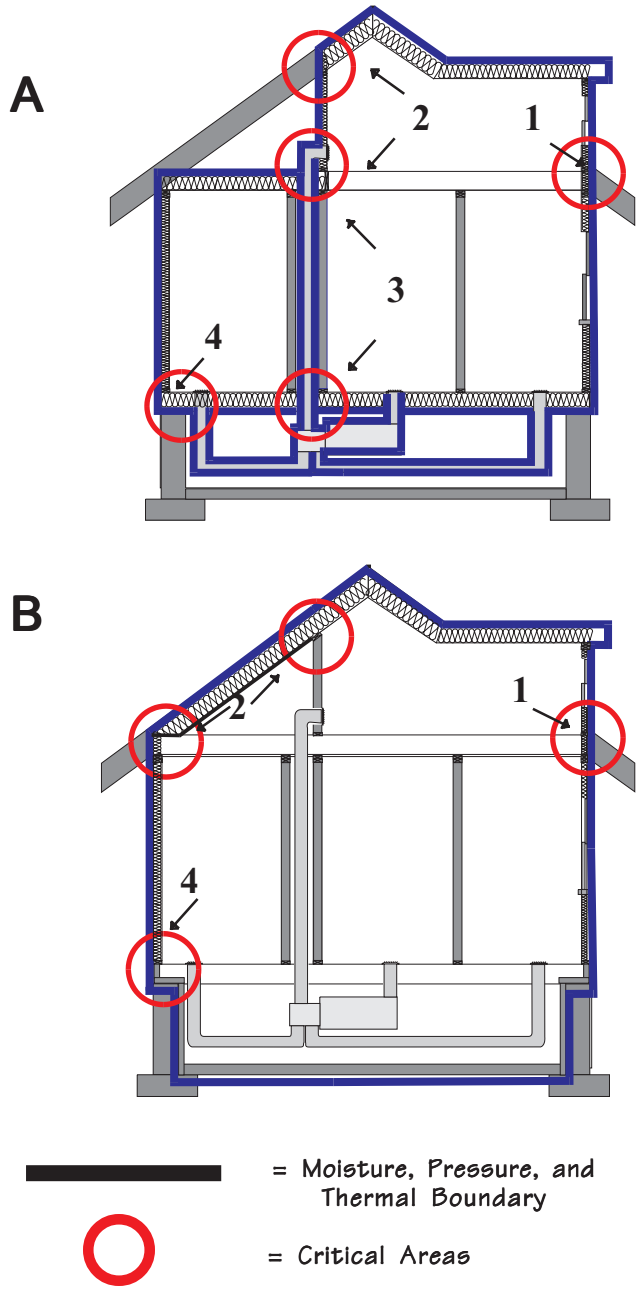

Critical Area Identifiers

1 Band joists and intersections with shed roofs
2 Joints between attic and conditioned space
3 Tops and bottoms of chases
4 Other critical areas not in the diagrams include stairwells, bonus rooms over garages, cantilevered floors, dropped framing over cabinets and shower-tub units, and fireplaces

DUCT LEAKS AND INFILTRATION

Forced-air heating and cooling systems should be *balanced* — the amount of air delivered through the supply ducts should be equal to that drawn through the return ducts. If the two volumes of air are unequal, pressure imbalances may occur in the home, resulting in increased air leakage and possible health and safety problems.

If **supply ducts** in unconditioned areas have more leaks than return ducts:

- ❒ Heated and cooled air will escape to the outside, increasing energy costs.
- ❒ Less air volume will be "supplied" to the house, so the pressure inside the house may become negative, thus increasing air infiltration.
- ❒ The negative pressure can actually *backdraft* flues — pull exhaust gases back into the home from fireplaces and other combustion appliances. The health effects can be deadly if flues contain substantial carbon monoxide.

If **return ducts** in unconditioned spaces leak:

- ❒ The home can become pressurized, thus increasing air leakage out of the envelope.
- ❒ Hot, humid air is pulled into the ducts in systems in summer; cold air is drawn into the ducts in winter.
- ❒ Human health may be endangered if ducts are located in areas with radon, mold, or toxic chemicals from soil termite treatments, paints, cleansers, and pesticides.

Figure 3-19
Balanced Air Distribution

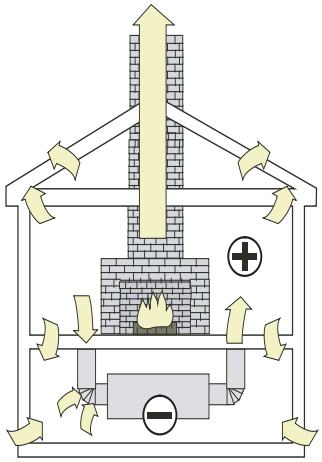

- ❒ If combustion appliances are located near return leaks, the negative pressure created by the leaks can be great enough to backdraft flues and chimneys.

Pressure differences can also result in homes with tight ductwork if the home only has one or two returns. When interior doors are closed it may be difficult for the air in these rooms to circulate back to the return ducts. The pressure in the closed-off rooms increases, and the pressure in rooms open to the returns decreases.

Installing multiple returns, "jumper" ducts or transfer grilles that connect closed off rooms to the main return, and undercutting doors to rooms without returns will alleviate these problems.

Figure 3-20
Air Leaks in Supply Ducts

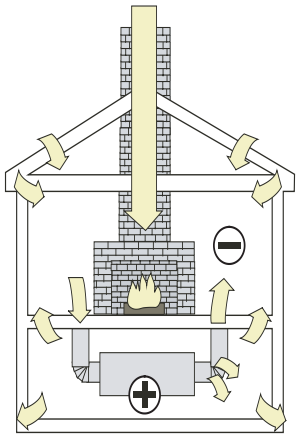

Figure 3-21
Air Leaks in Return System

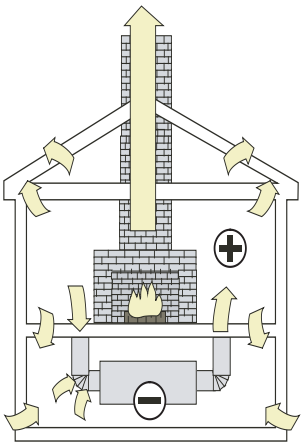

Figure 3-22
Return Blocked by Door

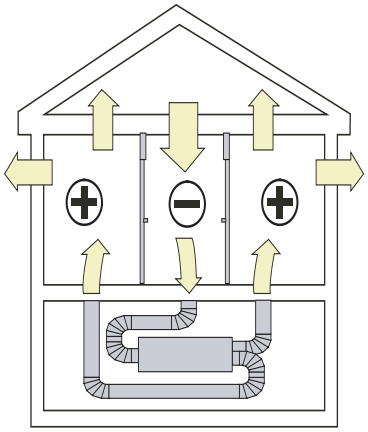

WALL MOISTURE EXAMPLE

The two examples on the following pages describe building science problems due to common failures of the home's systems. These problems can be minimized through careful attention to the construction techniques described in this publication.

A homeowner in Shreveport notices that paint is peeling on the exterior siding near the base of a bathroom wall. The drywall interior has mildew and the baseboard paint is peeling as well. What happened?

1. The interior of the wall has numerous air leaks — an air barrier system failure.
2. The door to the bathroom is usually closed. When the heating and cooling system operates, the room becomes pressurized, as it has no return and its door is not undercut at the bottom. This is an HVAC system failure.
3. The bath fan is installed improperly and does not exhaust moist air — another HVAC system failure.
4. When air leaks into the wall, it carries substantial water vapor, thus the failure of the air barrier and HVAC systems have led to a moisture control system failure.
5. The interior wall has a polyethylene vapor barrier, which is not an air barrier because it is not fully sealed to the outlet box, bottom and top plates, rough openings, and other penetrations. The exterior has CDX plywood sheathing, which is a vapor barrier.
6. When the air leaks carry water vapor into the wall cavity, the interior and exterior vapor barriers hinder drying — a moisture control system failure.
7. In winter, the inner surface of the plywood sheathing will be several degrees cooler than foam sheathing would have been. Thus, the plywood-sheathed wall has more potential for condensation — an insulation system problem.
8. As the water vapor condenses on the sheathing, it runs down the wall and pools on the bottom plate of the wall. Now the following problems occur:
   - ❒ The water threatens to cause structural problems by rotting the wall framing.
   - ❒ It wets the drywall, causing mold to grow.
   - ❒ It travels through the unsealed back surfaces of the wood siding and baseboard, causing the paint to peel when it soaks through the wood.
   - ❒ The multiple failures of the building systems create a potential structural disaster.

To solve this moisture problem the builder must address all of the failures. If only one aspect is treated, the problem may even become worse.

Figure 3-23
Wall Moisture

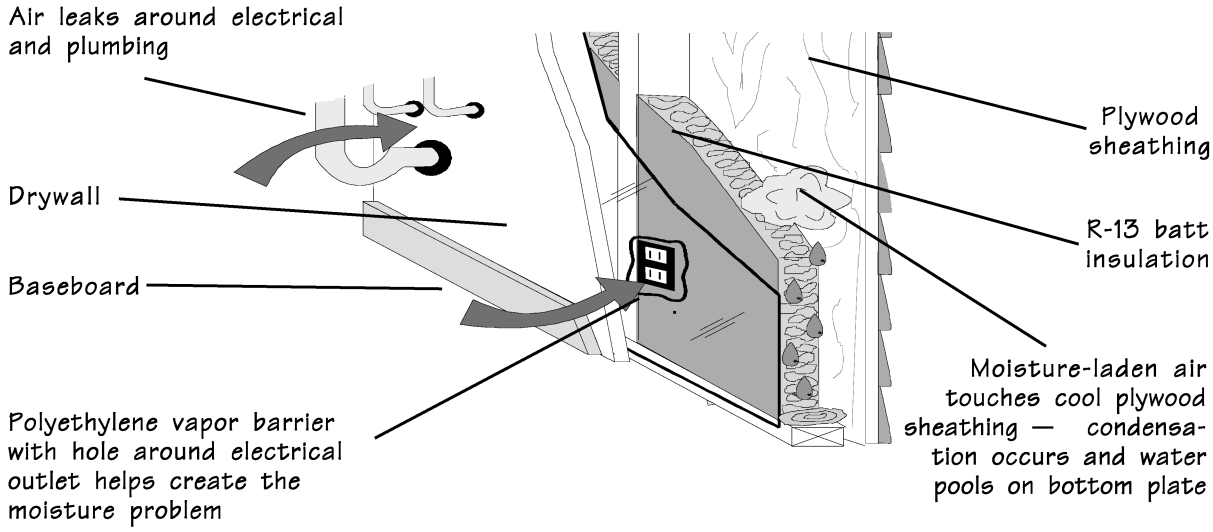

CARBON MONOXIDE DISASTER

1. A home has been built to airtight specifications — an air barrier system success.
2. However, the home's ductwork was not well sealed — a HVAC system failure. It has considerably more supply leakage than return leakage which creates a strong negative pressure inside the home when the heating and cooling system operates.
3. The homeowners are celebrating winter holidays. With overnight guests in the home, many of the interior doors are kept closed. The home has only a single return in the main living room.
4. When the system operates, the rooms with closed doors become pressurized, while the central living area with the return becomes significantly depressurized. Because the house is very airtight, it is easier for these pressure imbalances to occur.
5. The home has a beautiful fireplace without an outside source of combustion air. When the fire in the unit begins to dwindle, the following sequence of events could spell disaster for the household:

- ❒ The fire begins to smolder, producing increased carbon monoxide and other harmful pollutants.
- ❒ Because the fire's heat dissipates, the draft pressure, which draws gases up the flue, decreases.
- ❒ The reduced output of the fire causes the thermostat to turn on the heating system. Due to duct pressures and closed interior doors, the blower creates a relatively high negative pressure in the living room.
- ❒ Because of the reduced draft pressure in the fireplace, the negative pressure in the living room causes the chimney to backdraft — the flue gases are drawn back into the home. Backdrafting may generate considerable carbon monoxide and cause severe, if not fatal, health consequences for the occupants.

This example is extreme, but similar events occur in dozens of Louisiana homes each year. The solution to the problem is not to build leaky homes — they can experience similar pressure imbalances. Instead, eliminate the causes of pressure imbalances and install an external source of combustion air for the fireplace as well as a carbon monoxide detector.

Figure 3-24
Carbon Monoxide Disaster

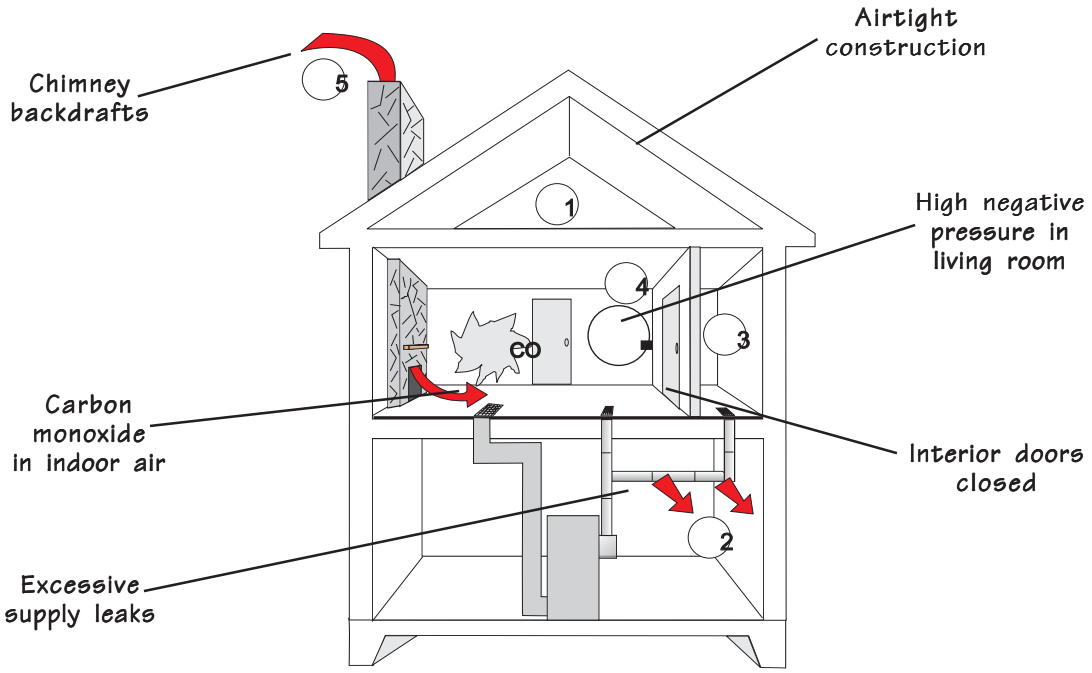

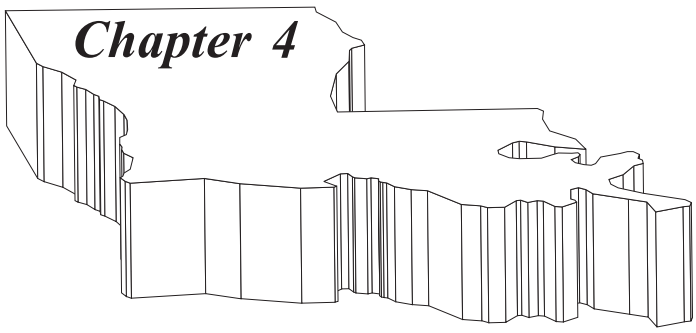

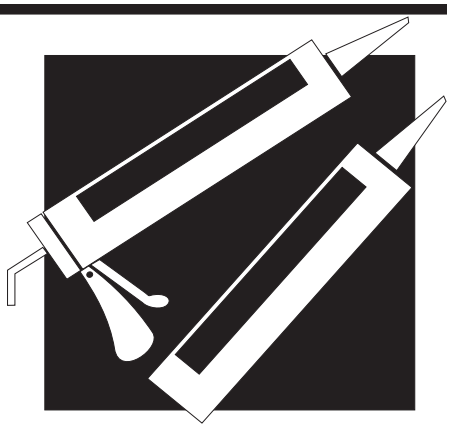

Air Leakage Sealing - Materials and Techniques

Air leakage is a major problem for both new and existing homes and can:

- ❒ Contribute 30 percent or more to heating and cooling costs
- ❒ Create comfort and moisture problems
- ❒ Draw in pollutants such as radon and mold
- ❒ Serve as a prime entry for insects and rodents

To reduce air leakage effectively requires a *continuous air barrier system (sometimes called an air retarder system)* — a combination of materials linked together to create a tight building envelope. An air barrier also minimizes air currents through insulation, helping maintain R-values. The air barrier should minimize air leakage through the building envelope — the boundary between the conditioned portion of the home and the unconditioned area.

Most standard insulation products are not effective at sealing air leakage. The R-value for these materials may drop if air leaks through the material. Some spray-applied insulation materials, such as higher density fiberglass, rock wool, cellulose, and foam can seal against air leakage. However, these materials are often only applied in framing cavities; therefore, additional air sealing must be done between framing components.

The builder should work with his or her own crew and subcontractors to seal all holes through the envelope. Then, he or she should install a continuous air barrier material, such as drywall or housewrap, around the envelope. It is critical in the air sealing process to use durable materials and install them properly.

The air barrier constitutes the pressure boundary of the home as discussed in Chapter 3. The pressure, moisture, and thermal boundaries should coincide: otherwise, cold winter air may leak past the insulation, or water vapor may enter an uninsulated space where it encounters building materials below their dew point. Always draw sections of your home similar to Figure 4-1 in order to locate the pressure boundary distinctly.

Figure 4-1
Creating a Pressure Boundary

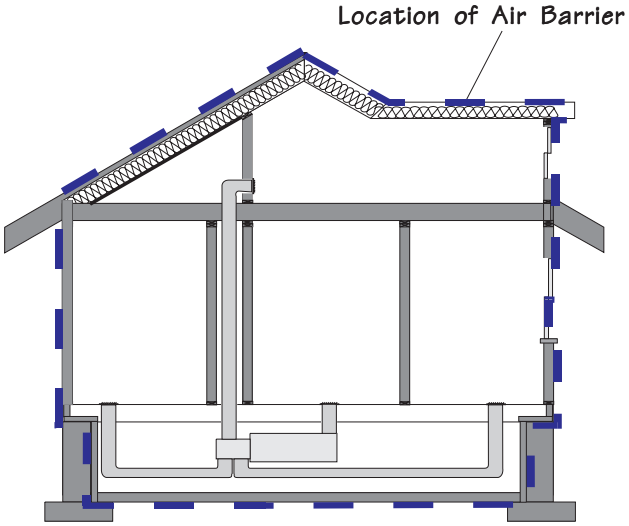

1. Install continuous insulation
2. Seal penetrations and bypasses
3. Install and seal air barrier material

Air Leakage Driving Forces

Air leakage requires two main ingredients:

- ❒ Holes — the larger the hole, the greater the air leakage. Large holes have higher priority for air sealing efforts.
- ❒ Driving force — a pressure difference that forces air to flow through a hole. Holes that experience stronger and more continuous driving forces have higher priority. The common driving forces are:
  - ❍ *wind* -- caused by weather conditions
  - ❍ *stack effect* -- upward air movement of warmer air
  - ❍ *mechanical blowers* -- induced pressure imbalances caused by operation of fans and blowers

Wind is usually considered to be the primary driving force for air leakage. When the wind blows against a building, it creates a high pressure zone on the windward areas. Outdoor air from the windward side infiltrates into the building while indoor air exits on the leeward side. Wind acts to create areas of differential pressure which causes both infiltration and exfiltration. The degree to which wind contributes to air leakage depends on its velocity and duration.

The temperature difference between inside and outside causes warm air inside the home to rise while cooler air falls, creating a driving force known as the *stack effect*. The stack effect is fairly weak but is almost always present. Most homes have large holes leading into the attic and crawlspace or basement. Because the stack effect is so prevalent and the holes through which it drives air are often so large, it is usually a major contributor to air leakage, moisture, and air quality problems.

Forced-air heating and cooling systems that are either poorly designed or installed can create three types of driving forces for air leakage:

- ❒ Suction pressures that pull outside air into return duct leaks.
- ❒ HVAC blower drives heated or cooled air out of the supply ductwork to the exterior.
- ❒ Duct-related problems can create pressure imbalances in the home that increase air leaks through holes in the pressure boundary

Figure 4-2
Wind Driven Infiltration

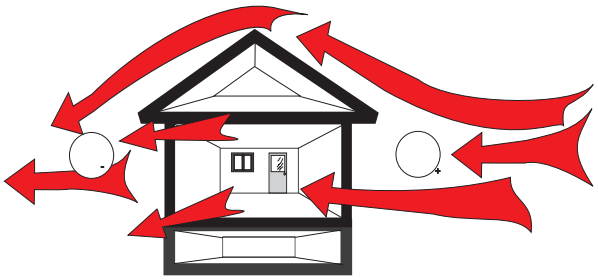

On average, wind in the Southeast creates a pressure difference of 10 to 20 Pascals on the windward side. However; most homes have only small cracks on the exterior, and winds are variable.

Figure 4-3
The Stack Effect

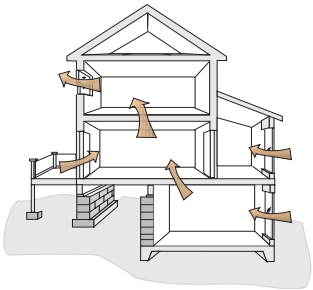

The stack effect can create pressure differences between 1 to 3 Pascals due to the power of rising warm air. Crawlspace and attic holes are often large.

Figure 4-4
Mechanical System Driven Infiltration

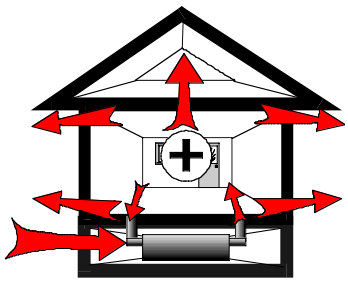

Leaks in supply and return ductwork can cause pressure differences of up to 30 Pascals. Exhaust equipment such as kitchen and bath fans and clothes dryers can also create pressure differences.

MEASURING AIRTIGHTNESS WITH A BLOWER DOOR

While there are many well known sources of air leakage, virtually all homes have unexpected air leakage sites called *bypasses*. These areas can be difficult to find and correct without the use of a *blower door*. This diagnostic device consists of a temporary door covering installed in an outside doorway and a fan which pressurizes (forces air into) or depressurizes (forces air out of) the building. When the fan operates, it is easy to feel air leaking through cracks in the building envelope. Blower doors have gauges which measure the building's air leakage rate.

One measure of a home's leakage rate is air changes per hour (ach), which estimates how many times in one hour the entire volume of air inside the building leaks outside. To determine the number of air changes per hour, many experts use the blower door to create a negative pressure of 50 Pascals. A *Pascal* is a small unit of pressure — about 0.004 inches water gauge. A quarter resting on your hand exerts over 120 Pascals. Fifty Pascals is approximately equivalent to a 20 mile-per-hour wind. Energy efficient builders should strive for less than four air changes per hour when testing their home at 50 Pascals pressure (4 ACH50). The rate of natural air changes per hour (nach) can be estimated from the ACH50 and certain characteristics of the home.

Some building scientists use a different criterion — the air leakage rate per square foot of exterior envelope (CFM50/ sq ft). The goal is often 0.30 CFM50/ sq ft or less. An expert blower door technician can perform more advanced tests to find major sources of air leakage.

Table 4-1
Typical Infiltration Rates
(in air changes per hour -- ach)

	ACH50 (blower door test result)	nach (natural rate)
New home with special airtight construction and controlled ventilation	0.5 - 2.5	0.03 to 0.15
Home with air barrier	3.0 - 5.0	0.15 to 0.3
Standard new home	7.0 - 15.0	0.4 to 1.0
Standard existing home	10.0 - 25.0	0.5 to 1.3
Older, leaky home	20.0 - 50.0	1.0 to 3.0

Figure 4-5
Blower Door

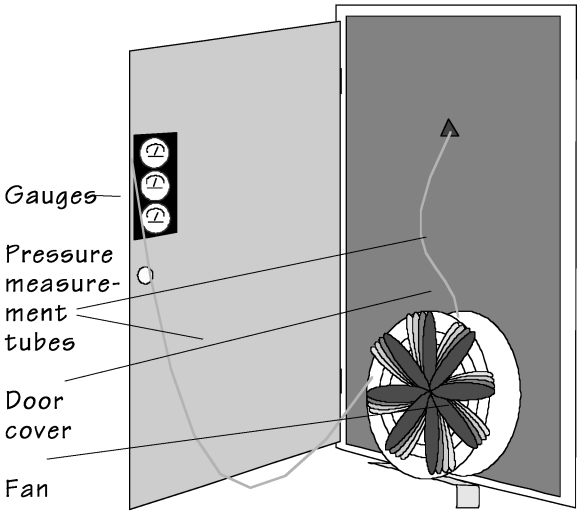

Figure 4-6
Home Blower Door Test

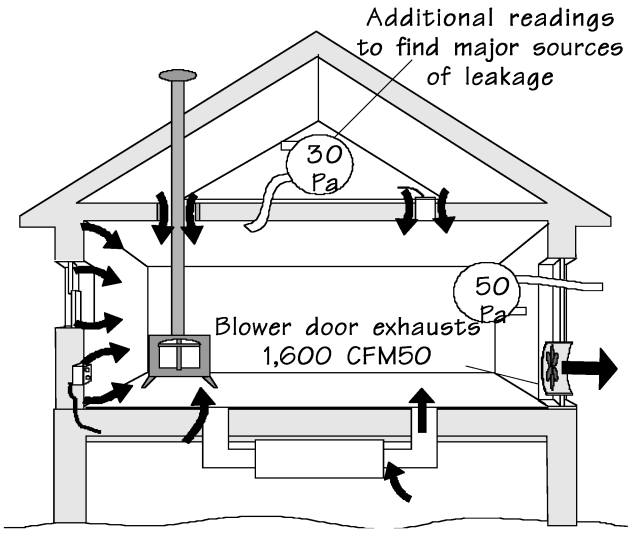

If the house has:
Volume of 16,000 cubic feet and
1,600 CFM50 (cubic feet per minute at 50 Pascals);
the ACH50=

$$\frac{1{,}600 \text{ CFM} \quad 50 \times 60 \text{ minutes/hour}}{16{,}000 \text{ Volume of house}} = 6 \text{ ACH50}$$

Materials

Most air barrier systems rely on a variety of caulks, gaskets, weatherstripping, and sheet materials, such as plywood, drywall, and housewraps. The extra cost of these materials is usually under $500 for standard house designs. Polyethylene can serve as an air barrier in addition to a vapor barrier; however, interior vapor barriers are not recommended for most homes in Louisiana.

Seal Penetrations and Bypasses

The first step for successfully creating an air barrier system is to seal all of the holes in the building envelope. Too often, builders concentrate on air leakage through windows and doors and ignore areas of much greater importance. Many of the key sources of leakage — called *bypasses* — are hidden from view behind soffits over cabinets, bath fixtures, dropped ceilings, as well as chases for flues and ductwork, as shown in Figure 4-7. Attic access openings and whole house fans are also common bypasses. Sealing these bypasses is critical to reduce air leakage and maintain the performance of insulation materials.

Figure 4-7
Air Leakage Through Bypass

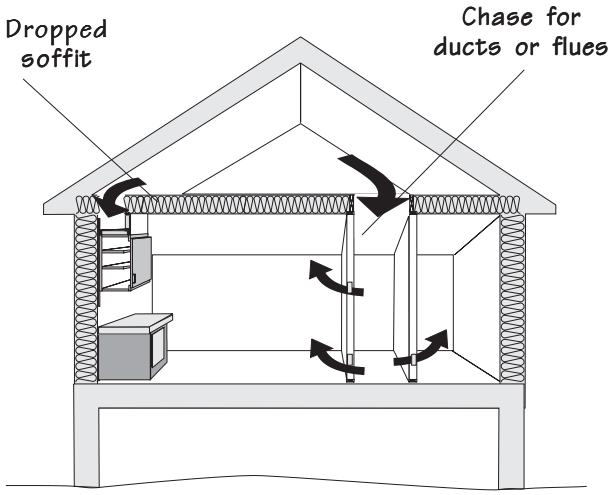

Figures 4-8, 4-9, and 4-10 show key areas that must be sealed to create an effective air barrier. The builder must clearly inform his or her subcontractors and workers of these details to ensure that the task is accomplished successfully. Make certain all sealants have at least 40-year service lives.

Table 4-2
Leaks and Sealants

Type of Leak	Commonly Used Sealants
Thin gaps between framing and wiring, pipes or ducts through floors or walls	40-year caulking; one-part polyurethane is recommended.
Leaks into attics, cathedral ceilings, wall cavities above first floor	Firestop caulking.
Gaps, or cracks or holes over 1/8 inch in width not requiring firestop sealant	Gasket, foam sealant, or stuffed with fiberglass or backer rod, and caulk on top.
Open areas around flues, chases, plenums, plumbing traps, etc.	Attach and caulk a piece of plywood or foam sheathing material that covers the entire opening. Seal penetrations. If a flue requires a noncombustible clearance, use a noncombustible metal collar, sealed in place, to span the gap.
Final air barrier material	Use Airtight Drywall Approach, continuous housewrap, or other air barrier system.

Figure 4-8
Typical Home Air Leakage Sites

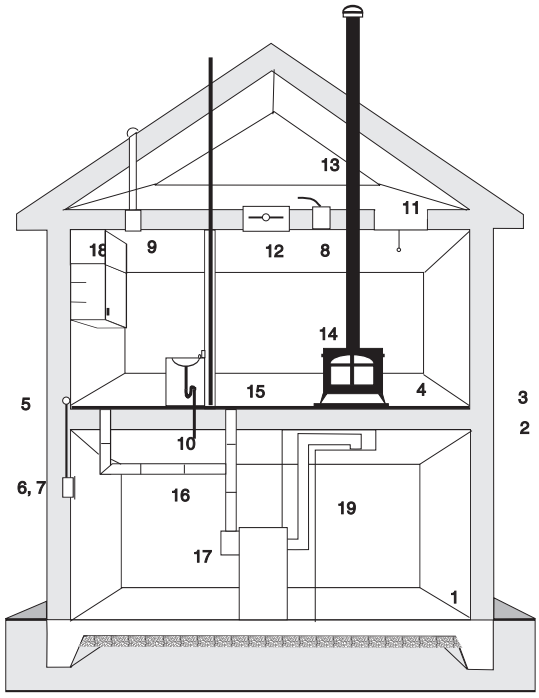

1. *Slab Floors* — seal all holes in the slab to prevent entry of water vapor and soil gas. A 4- to 6-inch layer of gravel under the slab is important to stop the seepage of water by capillary action.

2. *Sill Plate and Rim Joist* — seal all sill plates above basements and unvented crawlspaces. Seal rim or band joists between floors in multi-story construction with caulking or gaskets.

3. *Bottom Plate* — use caulk or gasket between the plate and subflooring.

4. *Subfloor* — use an adhesive to seal the seams between pieces of subflooring.

5. *Electrical Wiring* — use wire-compatible caulk or spray foam to seal penetrations.

6. *Electrical Boxes* — use approved caulk or tape to seal around wiring holes of electrical boxes. Seal between the interior finish material and boxes.

7. *Electrical Box Gaskets* — caulk foam gaskets to all electrical boxes in exterior and interior walls before installing coverplates.

8. *Recessed Light Fixtures* — consider using surface-mounted light fixtures rather than recessed lights. When used, specify airtight models rated for insulation coverage (IC).

9. *Exhaust Fans* — seal between the fan housing and the interior finish material. Choose products with tight-fitting backdraft dampers.

10. *Plumbing* — locate plumbing in interior walls, and minimize penetrations. Seal all penetrations with foam sealant or caulk.

11. *Attic Access* —weatherstrip attic access openings. For pull-down stairs, use latches to hold the door panel tightly against the weatherstripping. Cover the attic access opening with an insulated box.

12. *Whole House Fan* — use a panel made of rigid insulation or plastic to seal the interior cover or a box made from duct board to seal on top.

13. *Flue Stacks* — install a code-approved flue collar and seal with fire-rated caulk.

14. *Combustion Appliances* — closely follow local codes for firestopping measures, which reduce air leakage as well as increase the safety of the appliance. Make certain all combustion appliances, such as stoves, inserts, and fireplaces, have an outside source of combustion air and tight-fitting dampers or doors.

15. *Return and Supply Registers* — seal all boots connected to registers or grilles to the interior finish material.

16. *Ductwork* — seal all joints in supply and return duct systems with mastic.

17. *Air Handling Unit* (for heating and cooling system) — seal all joints and holes with mastic. Seal service panels with tape.

18. *Dropped Ceiling Soffit* — use sheet material such as drywall and sealant to stop leaks from attic into the soffit or wall framing; then insulate.

19. *Chases* (for ductwork, flues, etc.) — prevent air leakage through these bypasses with sheet materials and sealants.

Figure 4-9
Sealing Bypasses

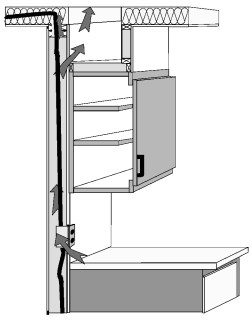

Dropped Ceiling Soffit - If kitchen cabinets or bath/ shower enclosures have dropped soffits, provide a continuous seal at the attic floor.

Plumbing - Seal penetrations, especially under bathtubs and other fixtures. Install drywall or housewrap behind bathtub to provide an air barrier.

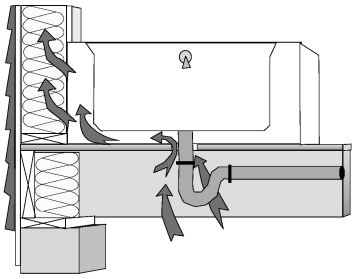

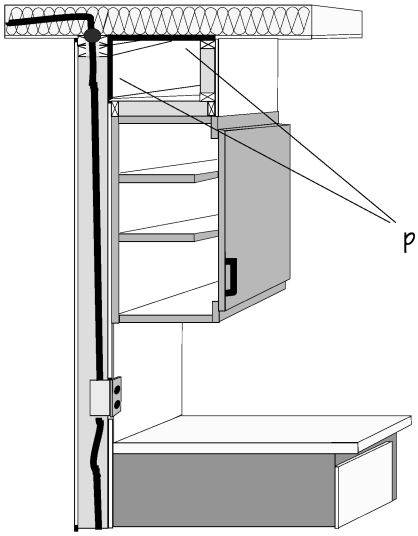

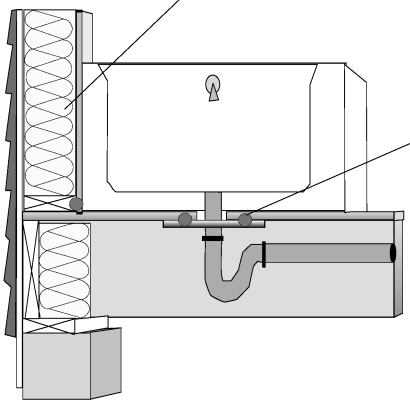

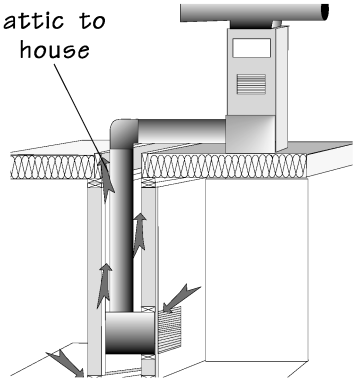

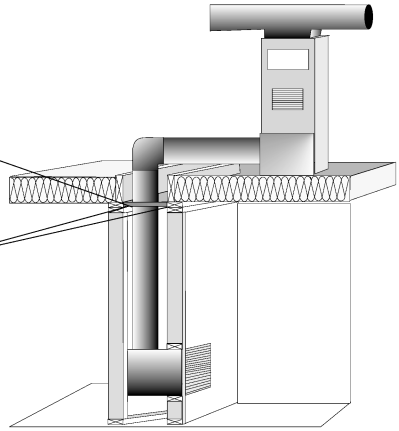

Return and Supply Plenums - Seal framed areas for ductwork.

Figure 4-10
Sealing More Bypasses

Chases - Framed chases for flues should be sealed at the attic floor. Use a continuous layer of plywood or other solid sheet good. Seal between the flue and combustible materials with fire-rated caulk and a noncombustible flue collar.

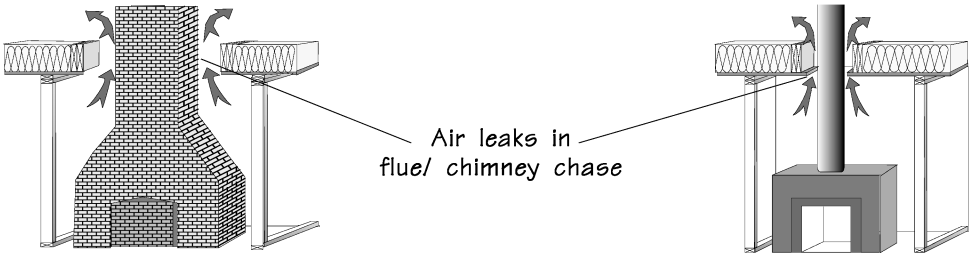

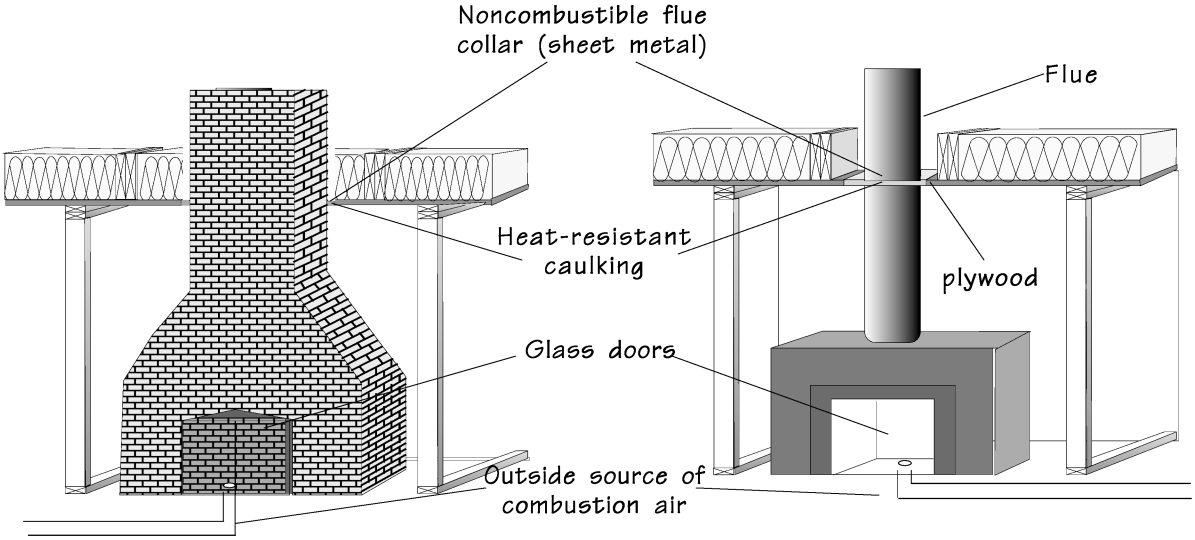

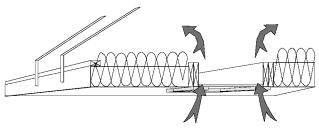

Attic hatches and stairs may also be uninsulated and encounter high air leakage; insulate and weatherstrip these key openings

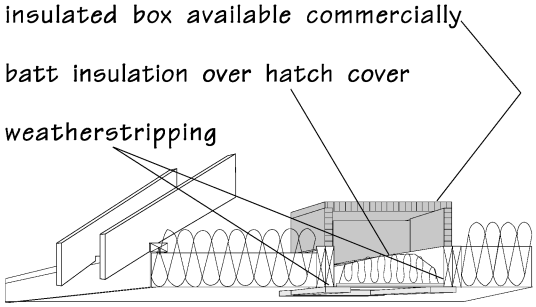

Or install outside the conditioned space

Standard recessed lights cannot be insulated and suffer substantial air leakage; install IC (insulated cover), air tight recessed fixtures

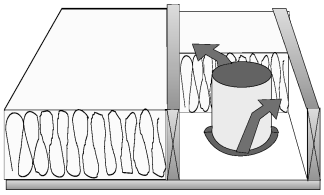

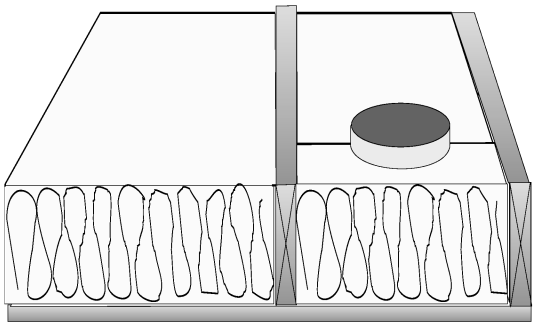

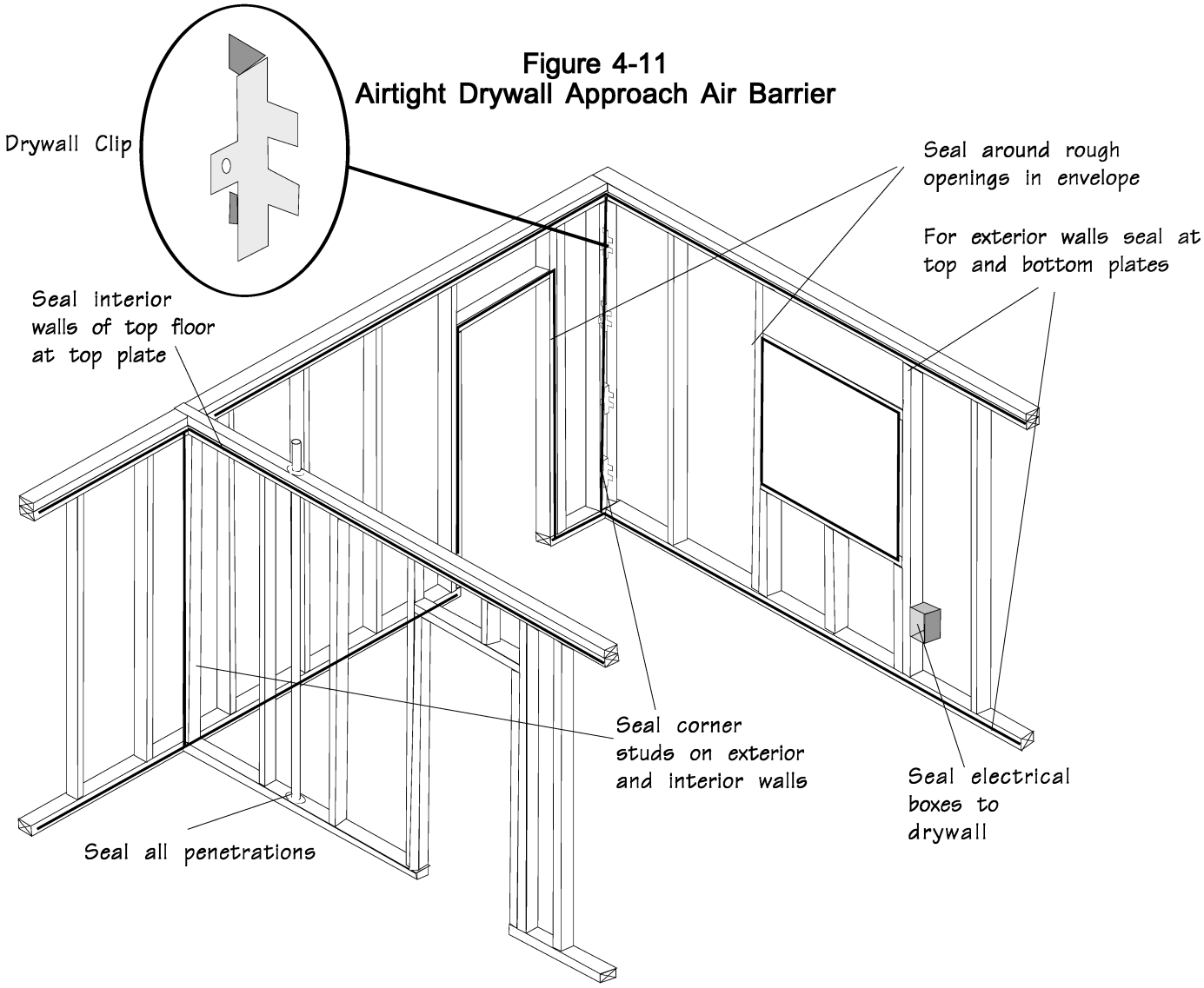

Figure 4-11
Airtight Drywall Approach Air Barrier

AIRTIGHT DRYWALL APPROACH

The Airtight Drywall Approach (ADA) is an air sealing system that connects the interior finish of drywall and other building materials together to form a continuous barrier. ADA has been used on hundreds of houses and has proven to be an effective technique to reduce air leakage as well as keep moisture, dust, and insects from entering the home.

In a typical drywall installation, most of the seams are sealed by tape and joint compound. However, air can leak in or out of the home in the following locations:

- ❒ Between the edges of the drywall and the top and bottom plates of exterior walls
- ❒ From the attic down between the framing and drywall of partition walls
- ❒ Between the window and door frames and drywall
- ❒ Through openings in the drywall for utilities and other services

ADA uses either caulk or gaskets to seal these areas and make the drywall a continuous air barrier system. ADA gaskets are pliable materials with "memory" -- when compressed and then released by drywall that is shrinking and expanding, they quickly return to their previous position. The gaskets can be applied long before the drywall crew arrives -- just make sure they do not remove the gaskets.

ADA Advantages

Effective — ADA is a reliable air barrier.

Simple — does not require specialized subcontractors or unusual construction techniques. If gasket materials are not available locally, they can be shipped easily.

Does not cover framing — the use of ADA does not prevent the drywall from being glued to the framing.

Scheduling — gaskets can be installed anytime between when the house is "dried-in" and the drywall is attached to framing.

Adaptable — builders can adapt ADA principles to suit any design and varying construction schedules.

Cost — materials and labor for standard designs should only cost $100-$300.

ADA Disadvantages

New — although ADA is a proven technique, many building professionals and code officials are not familiar with its use.

Not a vapor barrier — if required, a separate vapor barrier must be used with ADA. However, faced insulation batts, polyethylene plastic, or vapor retarder paint work well.

Requires thought — while ADA is simple, new construction techniques require careful planning to ensure that the air barrier remains continuous. However, ADA is often the most error-free and reliable air barrier for unique designs.

Requires care — gaskets and caulking can be damaged or removed by subcontractors when installing the drywall or utilities.

Figure 4-12
Creating an Air Barrier Between Floors

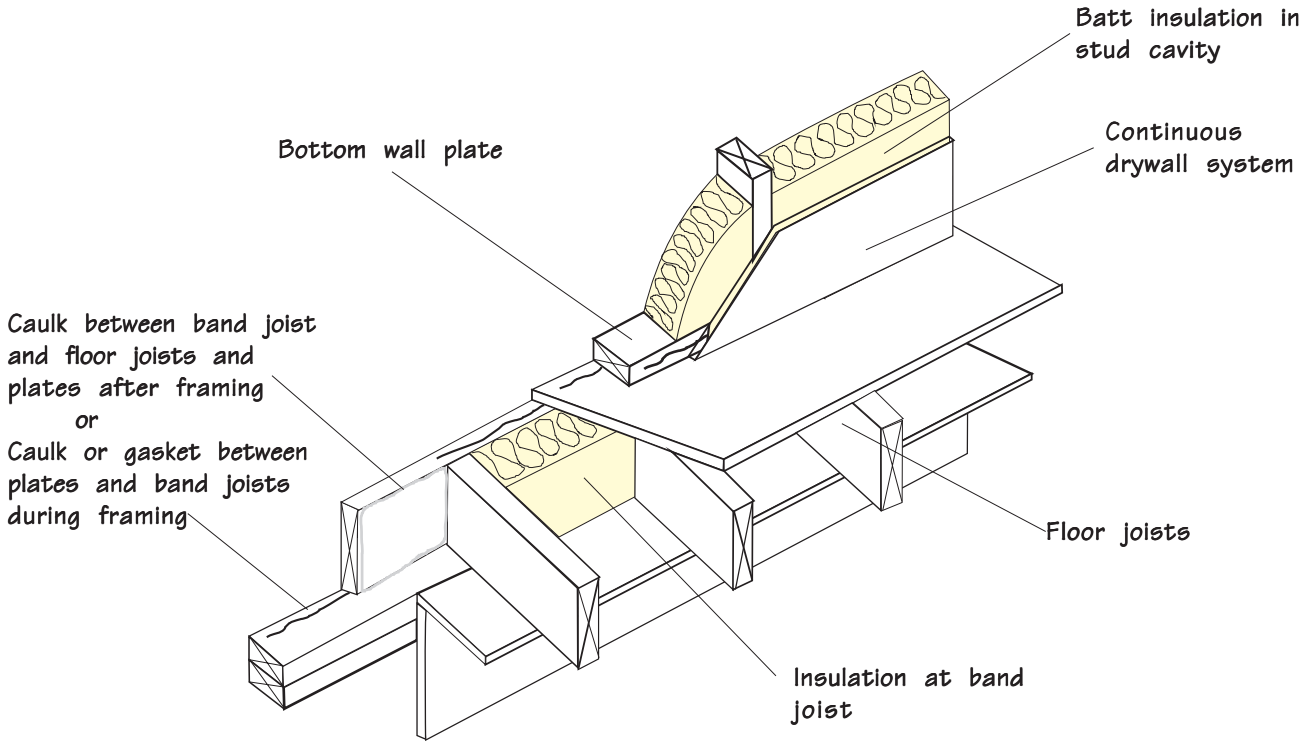

ADA Installation Techniques

Wood framed floors

- ❒ Seal seams in and around the band joist to minimize air leakage.
- ❒ For unvented crawlspaces or basements, seal beneath the sill plate.
- ❒ Seal the seams between pieces of subflooring with good quality adhesive.

Slab floors

- ❒ Seal expansion joints and penetrations with a sealant such as one-part urethane caulk.

Windows and doors

- ❒ Seal drywall edges to either framing or jambs for windows and doors.
- ❒ Fill rough opening with dry foam gasket or non-expanding caulk, spray foam sealant, or suitable substitute.
- ❒ Caulk window and door trim to drywall with clear or paintable sealant.

Exterior framed walls

- ❒ Seal between the bottom plate and subflooring with caulk or gaskets.
- ❒ Install ADA gaskets or caulk along the face of the bottom and top plate so that when drywall is installed it compresses the sealant to form an airtight seal against the framing.
- ❒ Use drywall joint compound or caulk to seal the gap between drywall and electrical boxes; install foam gaskets behind coverplates and caulk holes in boxes.
- ❒ Homes in Louisiana do not need an interior vapor barrier - sealing air leaks is more effective at moisture control .
- ❒ Seal penetrations through the top and bottom plates for plumbing, wiring, and ducts; local fire codes may require firestopping for leaks through top plates.

Partition walls

- ❒ Seal the drywall to the top plate of partition walls with attics and other unconditioned spaces above.
- ❒ Install gaskets or caulk on the face of the first stud in the partition wall. Sealant should extend from the bottom to the top of the stud to keep air in the outside wall from leaking inside.
- ❒ Seal the ductwork where it projects through partition walls.
- ❒ Seal penetrations through the top and bottom plates for plumbing, wiring, and ducts.

Ceiling

- ❒ Seal openings for chases and dropped soffits.
- ❒ Follow standard finishing techniques to seal the junction between the ceiling and walls.
- ❒ When installing ceiling drywall, do not damage ADA gaskets, especially in tight areas such as closets and hallways.
- ❒ Seal all penetrations in the ceiling for wiring, plumbing, ducts, attic access openings, and whole house fans.
- ❒ Avoid recessed lights; where used, install airtight, IC-rated fixtures and caulk between fixtures and drywall.

HOUSEWRAP AIR BARRIERS

Housewrap materials can reduce air leaks through exterior walls if installed properly. They are advantageous in Louisiana because they are permeable to water vapor, thus helping prevent moisture build-up in walls.

One of the major problems with housewraps has been their relatively poor field installation. In fact, many homes with exterior housewraps do not reap the full energy savings because of subpar installation. To stop air leakage, the housewrap material must be sealed to the framing, and all penetrations and seams must be sealed as well.

Housewrap Advantages

Air barrier — housewrap allows water vapor to pass through.

Availability — housewraps have been used for years in homes and are usually available in local building supply houses.

Installation — housewraps require no special tools and can be installed in large sheets with relatively few joints. Tears can be repaired with approved tapes.

Cost — materials and labor for completely air sealing standard home designs should only cost a few hundred dollars.

Marketing — the visibility of housewraps help advertise the home as "energy efficient".

Housewrap Disadvantages

Sealing penetrations and seams — it can be difficult to seal housewraps to plumbing, wiring, and ducts; between overlapped seams; and at the junctions between floors, walls and ceilings. Many standard caulks do not provide an effective, long-term seal, so select products with 30 to 50-year guarantees.

Connection to floor and ceiling--housewraps can seal leaks through exterior walls, but the builder must take care to connect and seal the product to ceiling and floor assemblies.

Figure 4-13
Housewrap-Window Connection

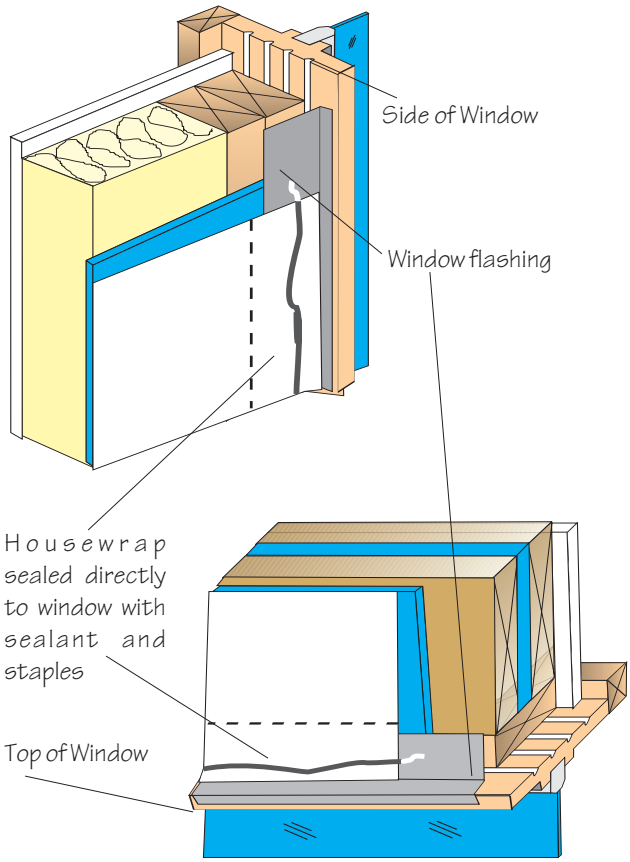

Figure 4-14
Sealing Seams in Housewrap

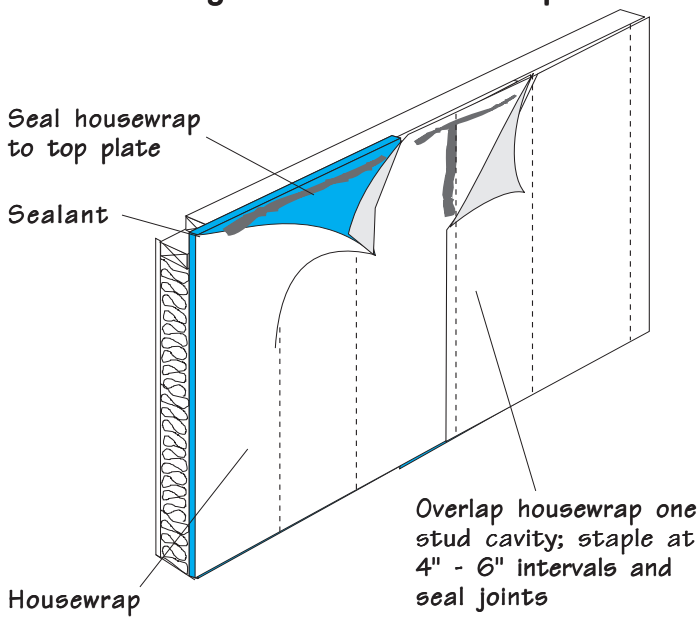

Figure 4-15
Recommended Housewrap
Installation Process & Procedures

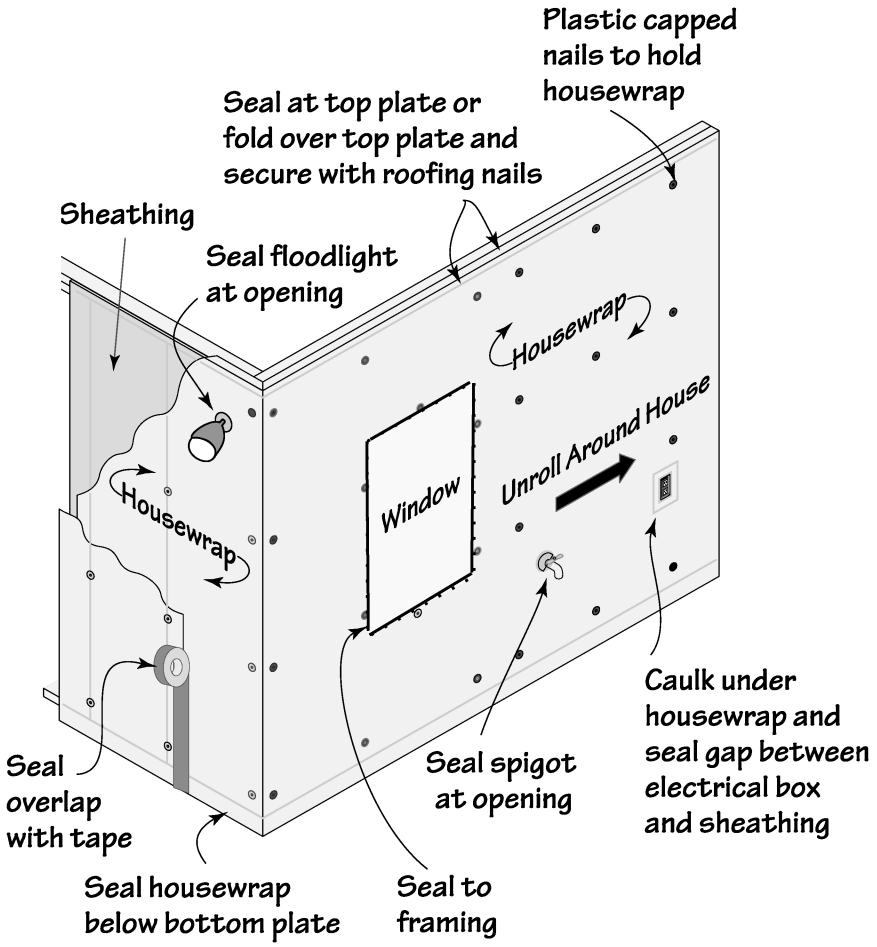

Figure 4-16
Sealing Sheathing as Exterior Air Barrier

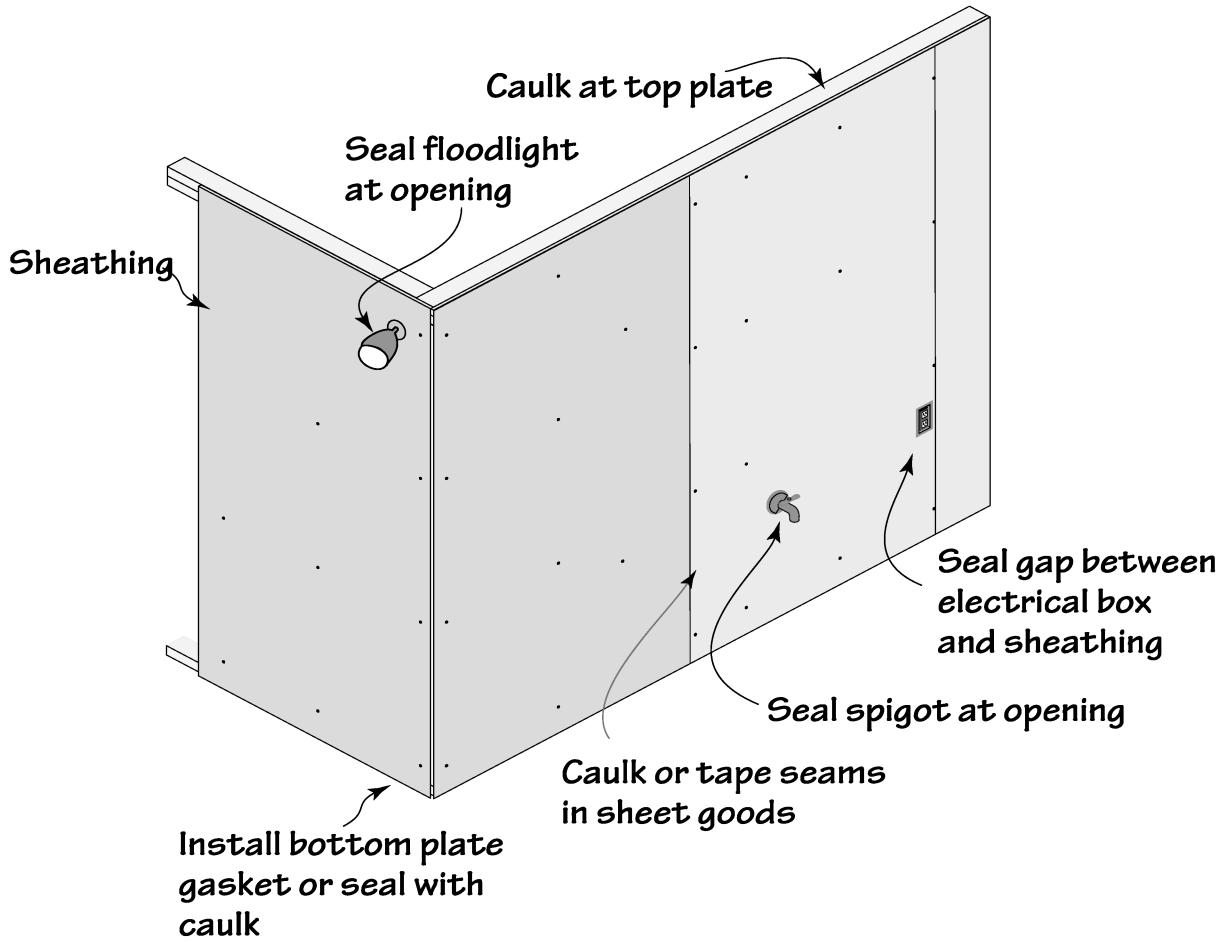

Foam Sheathing Barrier

Foam exterior sheathing can serve as both insulation and an exterior drainage. Detailing is, of course, critical especially at joints and penetrations. All seams should be sealed, as shown in Figure 4-16. Horizontal seams must be flashed with Z-flashing or comparable sealants.

The exterior sheathing material can either serve as a moisture shedding/ air sealing membrane, or as a moisture absorbing surface that may contribute to the degradation of the building envelope. The keys to having a beneficial sheathing surface are:

- ❒ Either avoid or protect sheathing materials that will degrade, such as OSB, plywood, and exterior drywall.
- ❒ Always lap protective materials such as housewrap and exterior felt higher over lower (shingle style) to shed water.
- ❒ Do not use tape to seal horizontal seams, install flashing instead.
- ❒ Provide moisture and vapor a place to escape — a drain for moisture and a vent for vapor.

Of course, it is important in Louisiana to allow the wall to dry — usually by eliminating the interior vapor barrier and letting water vapor inside the wall cavity move into the air conditioned home. Therefore, avoid the use of vinyl wallpapers and other interior vapor barrier materials.

Notes:

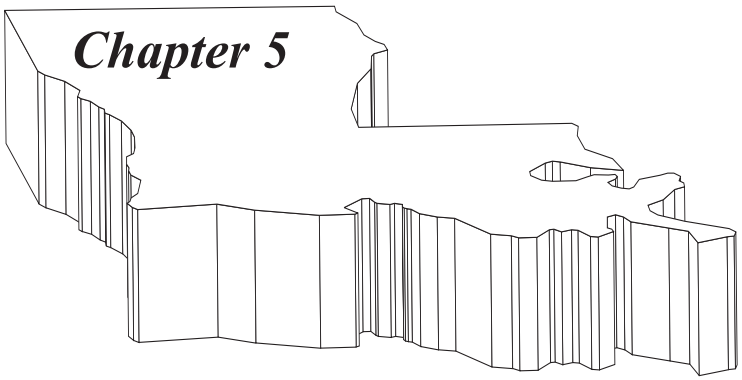

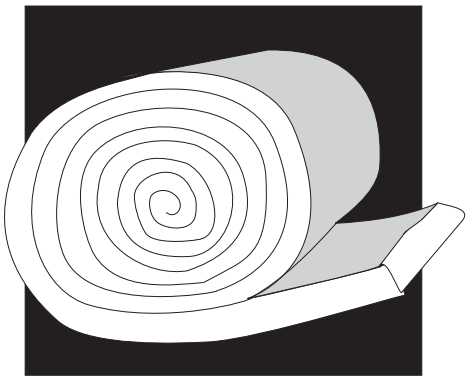

Insulation Materials and Techniques

The key to an effective insulation system is proper installation of quality insulation products. A house should have a continuous layer of insulation around the entire building envelope. Studies show that improper installation can cut performance of the insulation by 30% or more.

Figure 5-1
Insulating the Building Envelope — Recommended R-values*

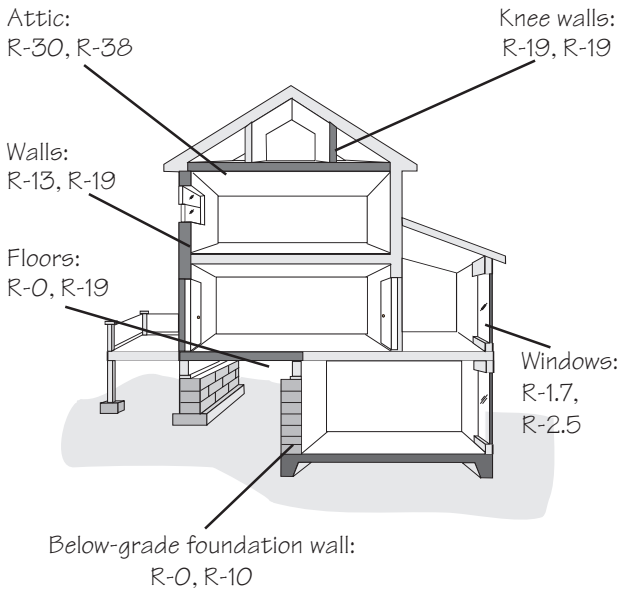

*First numbers are for southern and central Louisiana, while the second numbers are for northern portions of the state

Insulation Materials

The wide variety of insulation materials makes it difficult to determine which products and techniques are the most cost effective.

- ❒ *Fiberglass insulation* products come in batt, roll, and loose-fill form, as well as a high-density board material. Many manufacturers use recycled glass in the production process. Fiberglass is used for insulating virtually every building component — from foundation walls to attics to ductwork.
- ❒ *Cellulose insulation*, made from recycled newsprint, comes primarily in loose-fill form. Cellulose batt insulation has also been introduced in the marketplace. Loose-fill cellulose is used for insulating attics and can be used for walls and floors when installed with a binder, netting, or covering. Because of its high density, cellulose has the advantage of helping stop air leaks in addition to providing insulation value.
- ❒ *Rock wool insulation* is mainly available as a loose-fill product and can be installed in attics or blown using damp spray methods into walls. It is fireproof and several manufacturers use recycled materials in the production process.
- ❒ *Molded-expanded polystyrene* (MEPS), often known as beadboard, is a foam product made from molded beads of plastic. While it has the lowest R-value per inch of the foam products, it is also the lowest in price. MEPS is used in

Table 5-1
Fiberglass Batt Insulation Characteristics

Thickness (inches)	R-value	Cost (¢/sq ft)
3-1/2	11	12-16
3-1/2	13	15-20
3-1/2	15	34-40
6 to 6-1/4	19	27-34
5-1/4	21	33-39
8 to 8-1/2	25	37-45
8	30	45-49
9-1/2 to 9-3/4	30	39-43
12	38	55-60

This chart is for comparison only. Determine actual thickness, R-value, and cost from manufacturer or local building supply.

INSULATION AND THE ENVIRONMENT

There has been considerable study and debate about potential negative environmental and health impacts of insulation products. These concerns range from detrimental health effects for the installer to depletion of the earth's ozone layer.

Fiberglass and mineral wool — concerns about impacts on health from breathing in fibers — no universal proof as yet accepted.

Cellulose — concerns about the flammability, but the fire retardant chemical added to cellulose, along with its greater density, may provide greater fire safety than other insulation products. Also, there are concerns for the installer from breathing dust.

Foam products and ozone — for years, many foam products contained CFC's, which are quite detrimental to the earth's ozone layer as blowing agents. Current blowing agents are:

- **Expanded polystyrene** — pentane, which has no impact on ozone layer, but may increase potential for smog formation.
- **Extruded polystyrene, polyisocyanurate and polyurethane** — use primarily HCFC's which are 90% less harmful to the ozone layer than CFC's. Some companies are moving to non-HCFC blowing agents.
- **Icynene and open-cell polyurethane** — use carbon dioxide, which is much less detrimental than other blowing agents.

several alternative building products discussed in this chapter, including insulated concrete forms and structural insulated panels. It performs well in below-grade applications.

- *Extruded polystyrene* (XPS), also a foam product, is a homogenous polystyrene product made primarily by three manufacturers with characteristic colors of blue, pink, and green. It is an excellent product for below-grade applications or exterior sheathing.
- *Polyisocyanurate and polyurethane* are insulating foams with some of the highest available R-values per inch. They are not designed for use below grade, unlike MEPS and XPS.
- *Open-cell polyurethane* is used primarily to seal air leaks and provide an insulating layer.
- *Icynene foam*, used primarily to seal air leaks and provide an insulating layer, is made with carbon dioxide rather than more polluting gases such as pentane or hydro-chloro-fluoro carbons used in other foams.
- *Aerated concrete*, including lightweight, autoclaved (processed at high temperature) concrete, can provide a combination of moderate R-values and thermal mass for floors, walls, and ceilings.

Insulation Strategies

As shown in Table 5-3, fiberglass, rock wool, and cellulose products are the most economical and should serve as bulk insulation in attics, walls, and floors. In attics, loose-fill products are usually less expensive than batts or blankets. Blown cellulose and rock wool are more dense than fiberglass, helping reduce air leakage.

Foam insulation strategies

Foam products are primarily economical when they can be applied in thin layers as part of a structural system or to help seal air leaks. Examples include:

- Foundation wall or slab insulation

Table 5-2 , Comparison of Insulation Materials (Environmental Characteristics, Health Impacts, and Typical Costs*)

Type of Insulation	Installation Method(s)	R-Value per inch (RSI/m)	Raw Materials	Pollution from Manufacture	Indoor Air Quality Impacts	Comments	Typical Cost ($/sq ft per R-value)**
Fiber Insulation							
Cellulose	loose fill, wetspray, dense pack, stabilized	3.0 - 3.7 (21 - 26)	newspaper, borates, ammonium sulfate	Negligable	Fibers and chemicals can be irritants, should be isolated from interior space	High recycled content, very low embodied energy	.011 - .016
Fiberglass	batts, loose fill, stabilized, rigid board	2.2 -4.0 (15 - 28)	silica, sand, limestone, boron, phenol formaldehyde resin, cullet	Air pollution from energy use	Fibers and chemicals can be irritants, should be isolated from interior space	New Miraflex fiber and some loose-fill products have no binder	Batts: .019 - .028 Loose fill: .015 - .018
Mineral Wool	loose fill, batts	2.8 - 3.7 (19 - 26)	steel slag, phenol formaldehyde, natural rock	Air pollution from energy use	See fiberglass		See fiberglass
Perlite	loose fill	2.5 - 3.3 (17 - 23)	volcanic rock	Negligable	Some nuisance dust		NA
Foam Insulation and sheathing							
Expanded Polystyrene	rigid boards	3.6 - 4.4 (25 - 31)	fossil fuels, pentane	Pentane emissions contribute to smog	Concern only for those with chemical sensitivities	Primary non-HCFC foam board	.063 - .084
Extruded Polystyrene	rigid boards	5.0 (35)	fossil fuels, HCFC-142b	Ozone depletion	Concern only for those with chemical sensitivities	At one time, a recycled product was available	.075 - .091
Polyisocyanurate	foil-faced rigid boards	5.6 - 7.7 (39 - 53)	fossil fuels, HCFC-141b	Ozone depletion	Concern only for those with chemical sensitivities	One non-HCFC based product is available	.061 - .075
Phenolic Foam	foil-faced rigid boards	8.0 (55)	fossil fuels, HCFC-141b	Ozone depletion	Concern only for those with chemical sensitivities	Not currently manufactured in U.S.	NA
Polyurethane	sprayed-in	5.6 - 6.8 (40 - 47)	fossil fuels, HCFC-141b	Ozone depletion	Concern only for those with chemical sensitivities		See polyisocyanurate
Open Cell Polyurethane	sprayed-in	4.3 (30)	fossil fuels	Negligable	Unknown, appears to be very safe	Doesn't harden; good air sealing	NA
Fiberboard Sheathing	rigid boards	2.6	sawmill waste, organic by-products, asphalt, wax	Dryer emissions	NA		.082 - .136
O.S.B. Sheathing	rigid boards	1.3	aspen or thinnings from commercial forests, phenol formaldehyde or isocyanate, wax	Blue haze, particulates	NA		.337 - .571

* not including installation

** prices will vary according to location

Sources: Manufacturers' data; ASHRAE Handbook of Fundamentals, 1993; Environmental Building News

- ❒ Exterior sheathing over wall framing
- ❒ Forms in which concrete can be poured
- ❒ As part of a structural insulated panel for walls and roofs
- ❒ Spray-applied foam insulation

Critical guidelines

When installing any insulating material, the following guidelines are critical for optimum performance:

- ❒ Seal all air leaks between conditioned and unconditioned areas
- ❒ Obtain complete coverage of the insulation
- ❒ Minimize air leakage through the material
- ❒ Avoid compressing insulation
- ❒ Avoid lofting (installing too much air) in loose-fill products

Table 5-3
Cost Comparison of Insulating Materials
(not including installation)

	Typical R-Value (per inch)	Typical Cost ($/sq ft per R-value)
Batts, blankets and loose-fill insulation		
Mineral wool, fiberglass, rock wool		
Batts or blankets	2.9-3.8	.019-.028
Loose-fill	2.2-2.9	.015-.018
Cellulose (loose-fill)	3.1-3.7	.011-.016
Cotton insulation	3.0-3.7	.024-.030
Foam insulation and sheathing		
Polyisocyanurate and polyurethane	5.6-7.0	.061-.075
Extruded polystyrene	5.0	.075-.091
Expanded polystyrene	4.0	.063-.084
Fiberboard sheathing (blackboard)	2.6	.082-.136
OSB sheathing	1.3	.337-.571
Icynene	3.6-4.3	n/a

For example, R-30 loose fill fiberglass insulation for a 2,000 square foot attic would cost 30 x .015 to 0.018/sq. ft - R-Value = $0.45 to 0.54/square foot. For the entire attic, the cost should be $900 to $1,080.

Determine actual R-values and costs from manufacturers or local suppliers.

FOUNDATION INSULATION

Slab-on-Grade Insulation

Many of Louisiana's homes have slab-on-grade floors for the first story of conditioned space. Insulating the exterior of the slab in northern sections of the state can reduce winter heating bills by 10% to 20%. Slab insulation is recommended in many of the state's northern parishes by the Model Energy Code.

Termite problems in slab insulation

Slab insulation is controversial. Over the past decade, reports of termite infestations in homes with slab insulation have become more frequent, especially the notorious Formosan termite. These pests tunnel undetected through the foam to gain access to the wood framing in the walls. Some insurance companies no longer guarantee homes with slab insulation against termite damage. Recent rulings by national code organizations prohibit installing foam insulation in contact with the ground in the state. Because of the severity of the problem, **this publication does not recommend foam slab insulation at present in Louisiana.**

Figure 5-2 provides slab insulation details that may be more resistant to termites. Preventing termite problems is a key goal of any building, especially where a visual inspection of the foundation is not possible. Among the important preventive measures are:

- ❒ **Good drainage** — slope soil away from home and install foundation drains.
- ❒ **Remove organic matter** — remove all wood from around the foundation before backfilling.
- ❒ **Direct moisture away from the home** — use well maintained gutters and downspouts that connect to a drainage system.
- ❒ **Provide continuous termite shields** — protect pressure-treated wooden sill plate and other framing members with continuous aluminum or galvanized termite shield.
- ❒ **Treat soil and monitor pests** — make certain to hire a reputable termite company that will provide a full guarantee against pests. Install termite traps or other monitoring methods so that occupants can see if pests are near the building.

IDEAS FOR TERMITE RESISTANT SLAB INSULATION

Perimeter slab insulation should be planned carefully to ensure approval for a full termite contract. The goals of detailing work are to interrupt the path between termites and wood framing in the home completely, prevent moisture problems, blend foundation exterior finish with framed wall finish, and create at least 2 feet of continuous perimeter insulation. Once again, make certain your termite contract covers and local building inspectors approve homes with slab insulation.

Figure 5-2
Possible Monolithic Slab Details

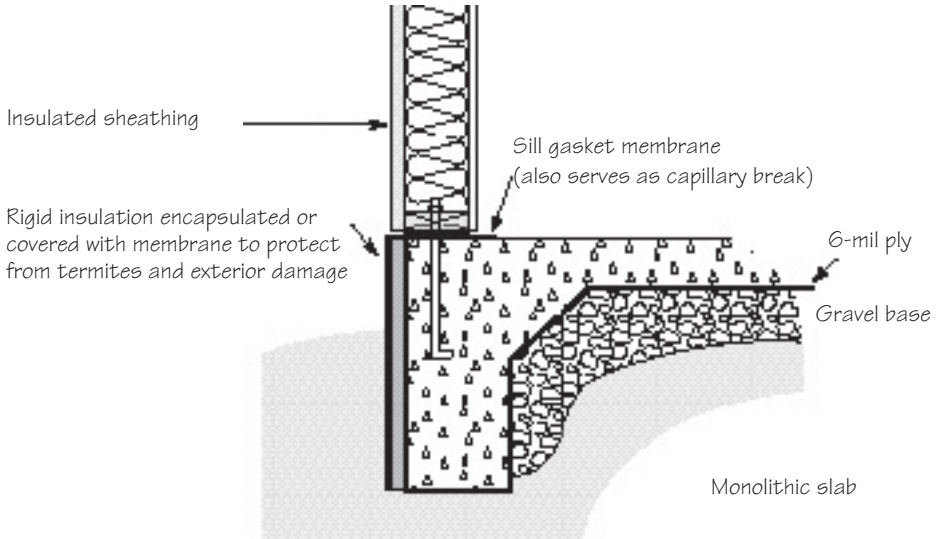

Figure 5-3
Possible In-Fill Slab Details

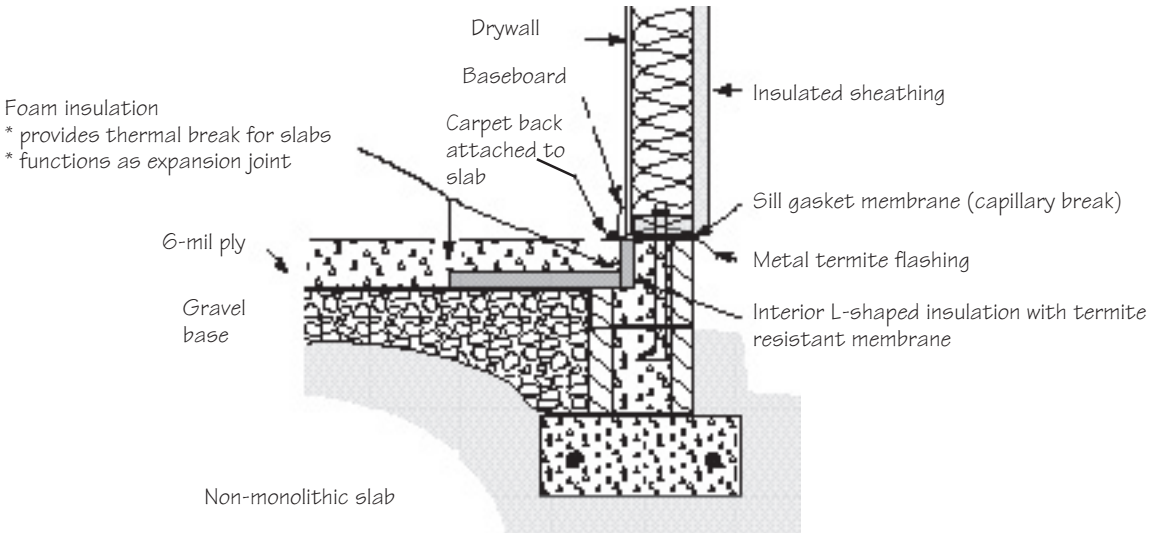

Foundation Wall Insulation

Foundation walls and other masonry walls are usually built of concrete blocks or poured concrete. Insulating foundation walls is more difficult than framed walls as there is no convenient cavity into which insulation batts can fit.

Insulating concrete block cores

Builders can insulate the interior cores of concrete block walls with insulation such as:

Vermiculite - R-2.1 per inch

Polystyrene inserts or beads - R-4.0 to 5.0 per inch

Polyurethane foam - R-5.8 to 6.8 per inch

Unfortunately, the substantial thermal bridging in the concrete connections between cores depreciates the overall R-value. Thus, this approach is only a partial solution to providing a quality, well insulated wall.

Figure 5-4
Insulating Concrete Block Cores
(R-4 to R-6 overall)

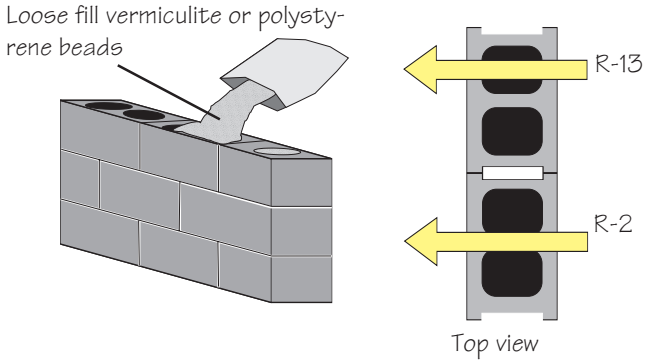

Interior foam wall insulation

Foam insulation can be installed on the interior of foundation walls; however, it must be covered with a material that resists damage and meets local fire code requirements. Half-inch drywall will typically comply, but furring strips will need to be installed as nailing surfaces. Furring strips are usually installed between sheets of foam insulation; however, to avoid the direct, uninsulated thermal bridge between the concrete wall and the furring strips, a continuous layer of foam should be installed underneath the nailing strips.

Figure 5-5
Interior Foam Wall Insulation
(R-10 to R-14 overall)

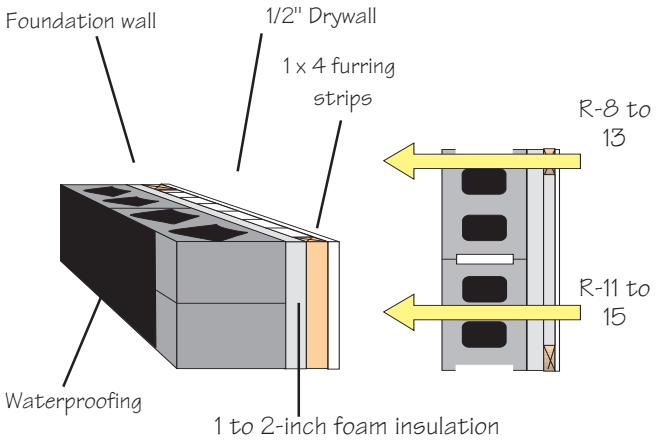

Interior framed wall

In some cases, designers will specify a framed wall on the interior of a masonry wall. Standard framed wall insulation and air sealing practice can then be applied.

Figure 5-6
Interior Framed Wall
(R-11 to R-13 overall)

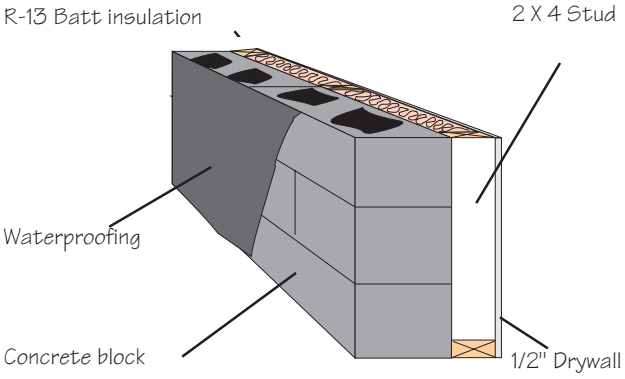

Lightweight concrete products

Lightweight, air entrained concrete is an alternative wall system. The aerated concrete, which can be shipped as either blocks or panels, combines elevated R-values (compared to standard concrete) with thermal mass.

Figure 5-7
Lightweight Concrete Products
(R-12 to R-15 overall)

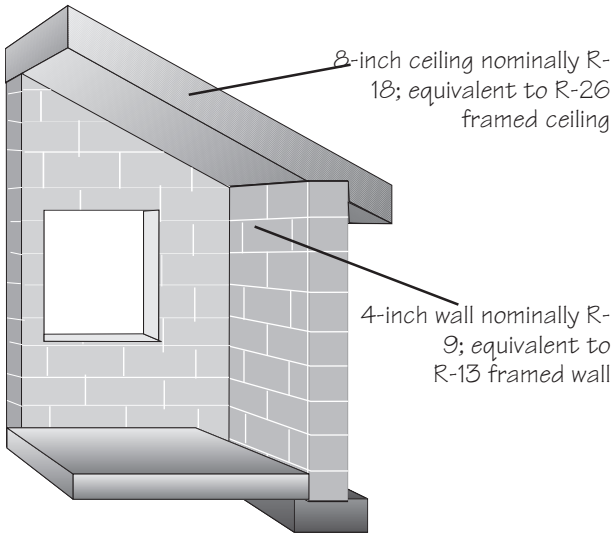

Insulated Concrete Form (ICF) wall systems

Polystyrene or polyurethane foam can be used as formwork for poured or sprayed structural concrete. Many of these systems can be economically attractive in areas with substantial heating and cooling requirements. As with other exterior foams the foam forms should not be in direct contact with the ground to help prevent termite problems. Some products use foam containing termiticides.

Figure 5-8
Insulated Concrete Form Wall Systems
(R-17 to R-24 overall)

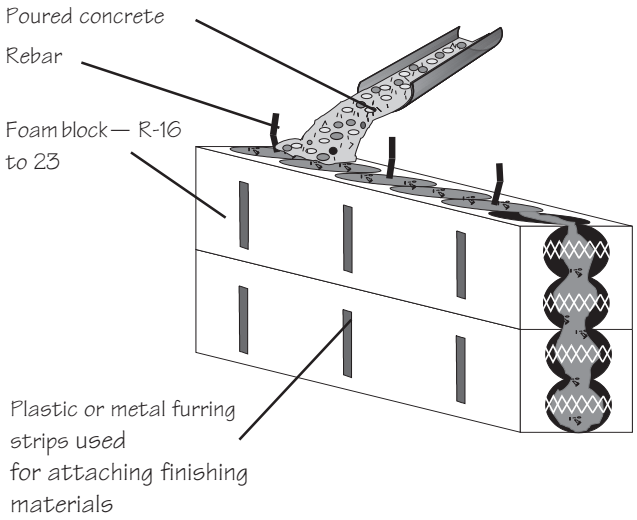

INSULATED CONCRETE FORM (ICF) FOUNDATION SYSTEMS

Foam insulation systems that serve as formwork for concrete foundation walls or even the entire exterior wall system of the home can save on the cost of materials and reduce heat flow. Although expensive, ICF's can serve as the entire wall system for the home. Advantages include improved termite control due to lack of wood in the exterior structure, durability, hurricane resistance, continuous insulation, and noise control. Examples of these types of products include:

Foam blocks — Several companies manufacture foam blocks that can be installed quickly on the footings of a building. Once stacked, reinforced with rebar, and braced, they can be filled with concrete. Key considerations are:

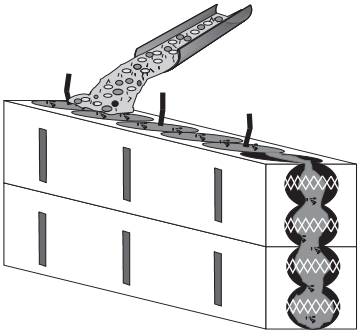

- ❒ Bracing requirements — the cost of bracing the foam blocks before construction may outweigh any labor savings from the system. Some products require little bracing while others need substantially more.
- ❒ Stepped foundations — make sure of the recommendations for stepping foundations — some systems have 12” high blocks or foam sections, while others are 16” high.
- ❒ Reinforcing — follow the manufacturer’s recommendations for placement of rebar and other reinforcing materials.
- ❒ Concrete fill — make sure that the concrete ordered to fill the foam foundation system has sufficient slump to meet the manufacturer’s requirements. These systems have been subject to blowouts when the installer did not fully comply with the manufacturer’s specifications. A blowout is when the foam or its support structure breaks and concrete pours out of the form.
- ❒ Termites — follow the guidelines in this chapter concerning termite prevention strategies with any foam product. Homes built completely with ICF's will minimize termite risks because they eliminate framing lumber.

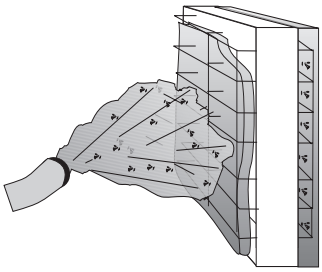

Spray-on systems — Concrete can be sprayed onto foam panels which are covered by a metal reinforcing grid, part of which is exposed. A structural concrete mixture is sprayed onto the exposed reinforcing metal. As with foam block systems, installers must follow manufacturer’s recommendations carefully for a successful system.

Foam panel/ snap tie systems — Some companies produce systems in which insulation panels are locked together with plastic snap ties. A space, typically eight inches, is created between the foam panels that is filled with concrete. As with foam block systems, installers must follow manufacturer’s recommendations carefully for a successful system.

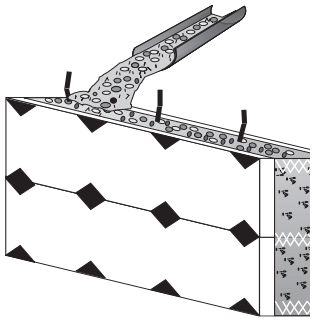

Note: These systems should not be used below grade to reduce potential for termite infestation.

ARE FOUNDATION VENTS NECESSARY?

Considerable research has recently delved into crawlspace ventilation. The purpose of crawlspace vents is to dry out the air under the house. The major source of moisture has been from the earth floor of the crawl space in most homes. However covering the earth with a layer of polyethylene will eliminate most of the moisture.

Thus in crawlspaces with ground covers, little moisture comes from the earth floor. In Louisiana, the second greatest source of moisture is air coming through the vents that were intended to reject moisture.

During summer, air conditioning often cools the floor framing and crawlspaces below the dewpoint temperature of outdoor air. Warm moist outside air coming through the vents can then condense inside the crawlspace as shown in Figure 5-9.

Venting crawlspaces which have air conditioning ducts can be of particular concern. Often the ductwork is leaky and poorly insulated and creates a cold surface that causes moisture in the air to condense. In some cases water accumulating in duct insulation has become heavy enough to pull the entire duct loose.

Given the poor ability of outdoor air to aid in dehumidifying crawlspaces in summer and most builders' desire to avoid ventilation in winter in order to keep crawlspaces warmer, many building professionals feel that an unvented crawlspace is the best option in homes with good exterior drainage systems. However, get approval from local code officials before omitting vents.

Figure 5-9
Relative Humidity (RH) and Foundation Vents

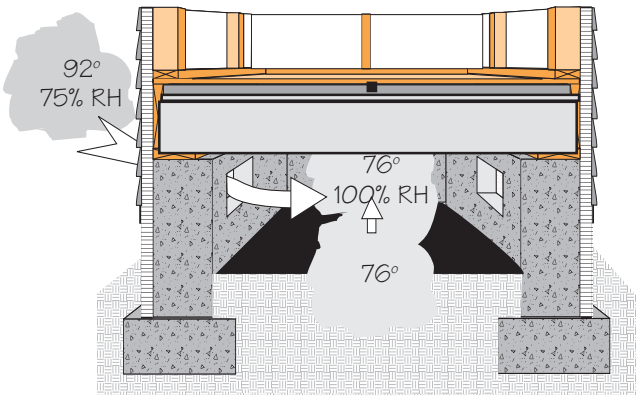

Figure 5-10
Insulated Wood Framed Floors

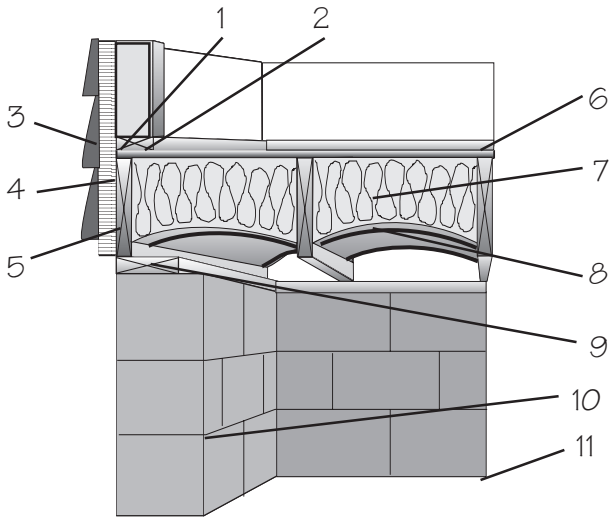

1. Bottom plate
2 Sealant
3. Exterior finish
4. Insulated sheathing
5. Band joist
6. Subfloor
7. 6-inch insulation batt flush against subfloor with vapor barrier facing down; sandwich water piping in insulation; other insulation options include cellulose insulation or spray-foam insulation, such as polyurethane or icynene
8. Wire stave or tiger tooth
9. Sill plate (pressure treated)
10. Foundation wall
11. 10-mil high density polyethylene ground cover

FRAMED FLOOR INSULATION

Insulating Under Floors

Many Louisiana homes have floor structures consisting of 2x10 or 2x12 wood joists, wood I-beams, or trusses over unconditioned crawlspaces or basements. Insulation is usually installed underneath the subfloor between the framing members. To meet the International Energy Conservation Code, most homes need R-11 to R-19 floor insulation, depending on climatic zone.

Most builders use insulation batts with an attached vapor barrier for insulating framed floors. The batts should be installed flush against the subfloor to eliminate any gaps which may serve as a passageway for cold air

Figure 5-11
Insulated Floor Over Pier Foundation

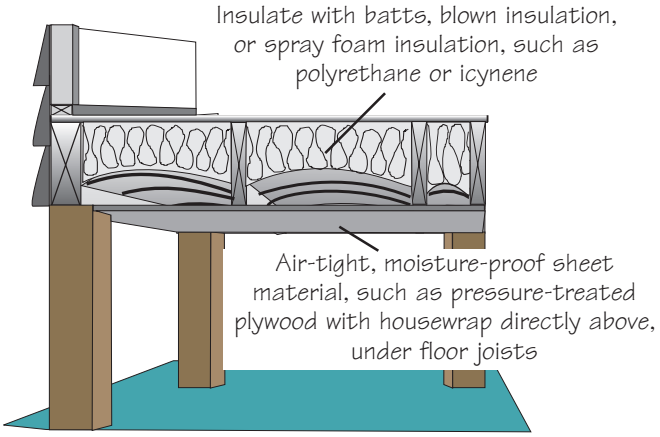

Table 5-4
Economics of Framed Floor Insulation*

	Energy Savings ($/yr)	Extra Installed Costs ($)	Annual Rate of Return	Extra Mortgage Costs ($/yr)
Compared to an uninsulated floor:				
1. R-11 Batt	185	700	28.4%	56
Compared to R-11 floor insulation:				
2. R-13 Batts	195	39	26.4%	64
3. R-19 Batts	218	300	20.6%	93
4. R-30 Batts	238	700	16.6%	128

*For a home with a 2,000 square-foot floor located in Baton Rouge. Analysis assumes 2% annual fuel price escalation; mortgage is 30 year, 7% loan; the energy savings were estimated using REMRate v. 8.3 software.

Figure 5-12
Insulated Crawlspace Walls

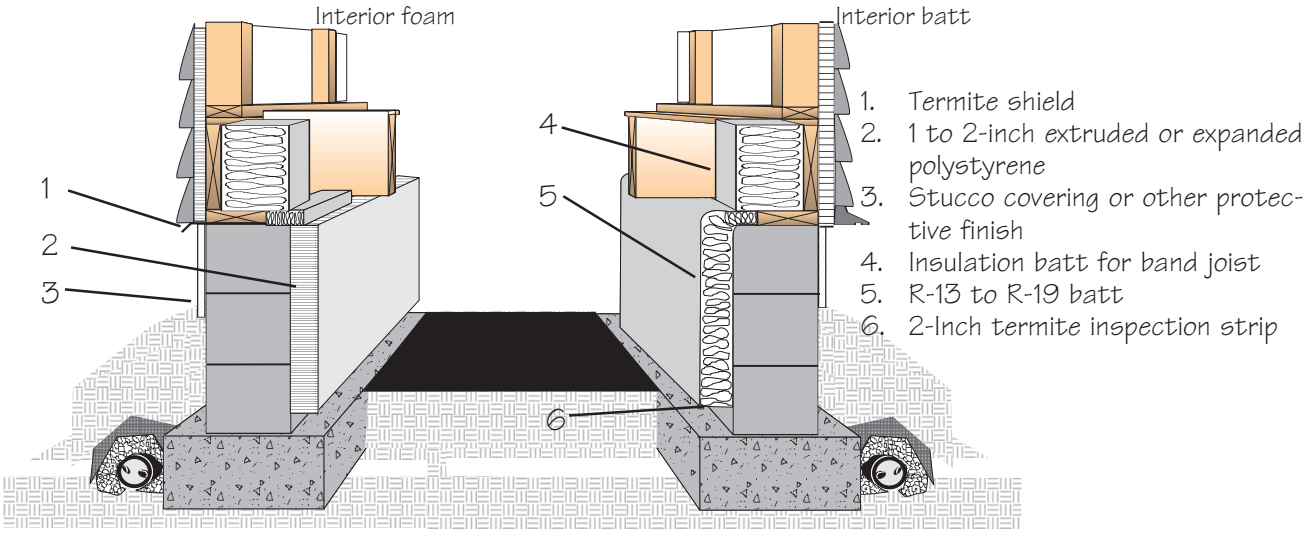

between the insulation and floor. Special rigid wire supports called "tiger teeth" hold the insulation in place. The vapor barrier of the insulation can face down away from the living area throughout Louisiana. It should always face down in southern Louisiana. The vapor barrier's orientation is not important in the northern localities.

Run wiring, plumbing, and ductwork below the bottom of the insulation so that a continuous layer can be installed. Be certain to insulate all plumbing and ductwork in unconditioned spaces such as crawlspaces, unheated basements, and attics.

Insulating Crawlspace Walls

For years, building professionals have assumed the optimal practice for insulating floors over unheated areas was to insulate underneath the floor. However, studies performed in Tennessee several years ago found that insulating the walls in *well sealed crawlspaces* and unconditioned basements can be an effective alternative to underfloor insulation. While the annual heating bills in the homes tested were one to three percent higher than those with underfloor insulation, the cooling bills dropped by approximately the same amount. Because the crawlspace remains cool in summer, the home can conduct heat to the crawlspace if there is no insulation under the floor.

Crawlspace wall insulation requirements:

- ❒ Cover the entire earth floor with 6- to 10-mil polyethylene (recommended in all homes).
- ❒ In winter, close the foundation vents. (As the sidebar on crawlspace ventilation describes (page 73), it is better to close the vents in summer as well).
- ❒ Furnaces or water heaters that are located in these areas and require outside air for combustion should have a direct inlet duct from the outside.
- ❒ A one or two-inch gap should be left at the bottom of the insulation to serve as a termite inspection strip.
- ❒ Insulate the band joist area in addition to the foundation wall.
- ❒ The crawlspace or basement must have an airtight barrier to the house.
- ❒ Review plans for the insulation with local building officials to ensure code compliance.

Advantages of crawlspace wall insulation

- ❒ Less insulation required (about 800 square feet for a 2,000 square-foot crawlspace with 4-foot walls).
- ❒ Pipe insulation is not required (spaces should stay warmer in winter).

Disadvantages of crawlspace wall insulation

- ❒ The insulation may be damaged by rodents and other pests.
- ❒ If the soil has high radon concentrations, a radon mitigation system will generally require ventilation of the crawlspace to the exterior, which necessitates insulating under the floor.
- ❒ If the crawlspace is leaky to the outside, the home will lose considerably more heat than standard homes with under-floor insulation.
- ❒ Proper site drainage and a continuous ground cover are essential to keep the crawlspace and insulation dry.

Figure 5-13
Floor Insulation Details

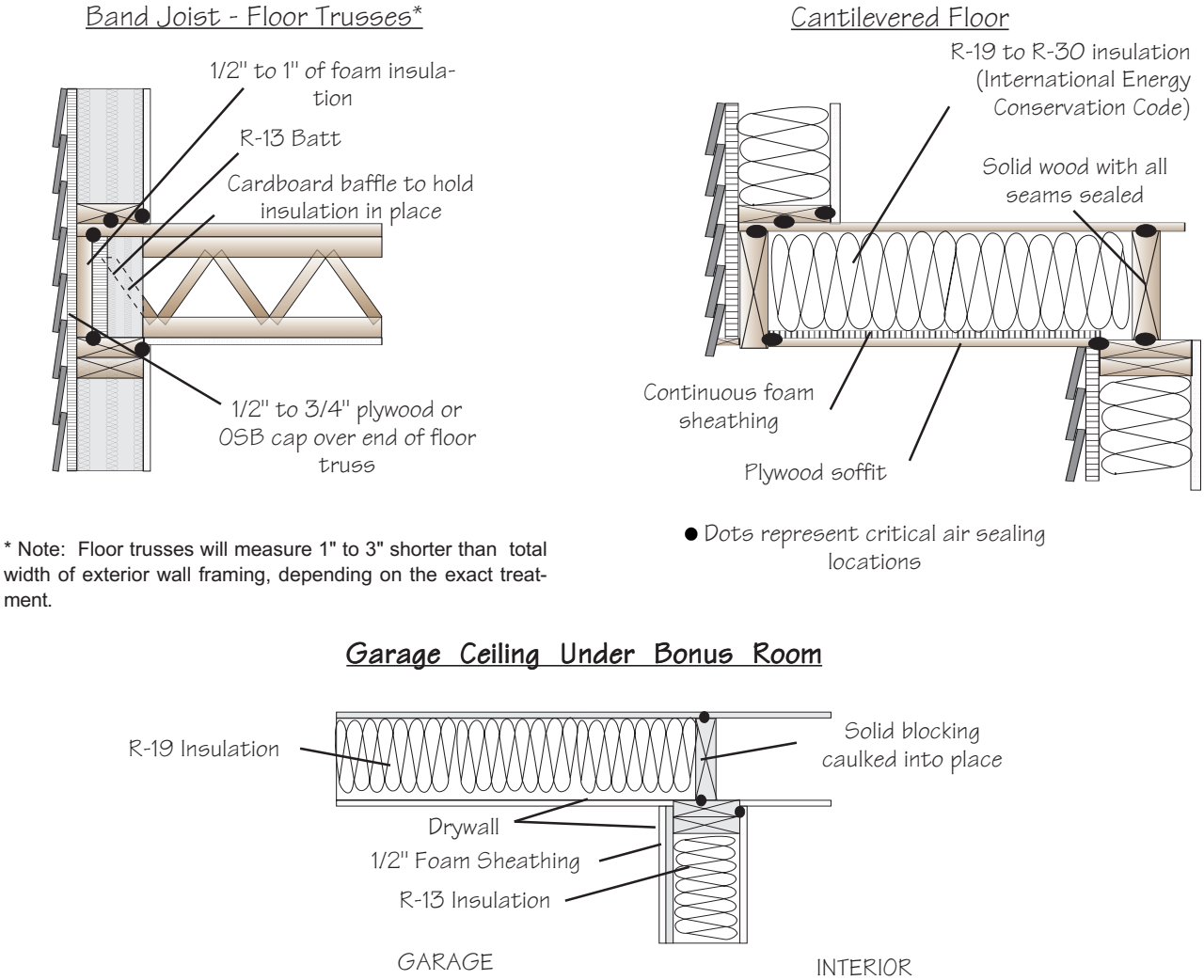

* Note: Floor trusses will measure 1" to 3" shorter than total width of exterior wall framing, depending on the exact treatment.

WALL CONSTRUCTION

Walls are the most complex component of the building envelope to insulate, air seal, and, moisture proof. Throughout the United States, debates continue on optimal wall construction. Issues include:

- ❒ Vapor barrier and air sealing systems
- ❒ 2 x 4 versus 2 x 6 framing; energy efficient framing
- ❒ Which types of wall insulation are best

Wall Framing with O.V.E.

Considerable work has been performed over the past three decades on reducing the amount of framing in our homes. The U.S. Forestry Products Association and other organizations have devised a framing system using Optimum Value Engineering (O.V.E.) that reduces unnecessary framing, yet maintains structural integrity. The goals of O.V.E. are to:

- ❒ Reduce framing time; lower construction costs
- ❒ Save trees
- ❒ Increase energy efficiency and reduce annual energy costs

Many builders have been resistant to adopt O.V.E. practices due to concerns about compromising structural integrity. With quality installations, the home's framing strength should not be altered by O.V.E. Approaches shown in Figure 5-14 include:

- ❒ Less framing in corners and partition wall intersections
- ❒ More efficient headers
- ❒ Eliminating curtailed studs (cripples)
- ❒ Using single top plates via point loading

2 x 4 Wall Insulation

Table 5-5 summarizes typical problems and solutions in walls framed with 2 x 4 studs. Solving wall construction problems requires preplanning, especially the first time these procedures are used. In addition to standard framing lumber and fasteners, the following materials will also be required during construction:

- ❒ Foam sheathing for insulating headers
- ❒ 1x4 or metal T-bracing for corner bracing
- ❒ R-13 or R-19 batts for insulating areas during framing behind shower/tub enclosures and other hidden areas
- ❒ 1/2" drywall or other sheet material where needed for sealing behind enclosures for showers and tubs and other areas that cannot be reached after construction
- ❒ Caulking or foam sealant for sealing areas that may be more difficult to seal later

Table 5-5
2x4 Framed Wall Problems and Solutions

Problem	Solution
Sometimes there is only a small space available for installation of insulation.	Install continuous exterior foam sheathing and medium (R-13) to high (R-15) density cavity insulation.
Enclosed cavities are more prone to cause condensation, particularly when sheathing materials with low R-values are used.	Install a continuous air barrier system and allow drying to the inside (no interior vapor barrier.) Use continuous foam sheathing on the exterior.
Presence of wiring, plumbing, ductwork, and framing members lessens potential R-value and provides pathways for air leakage.	Locate piping and ductwork in interior walls; avoid horizontal wiring runs through exterior walls; use air sealing insulation system.

Figure 5-14
Optimum Value Engineering (O.V.E.) Details

Corner Framing

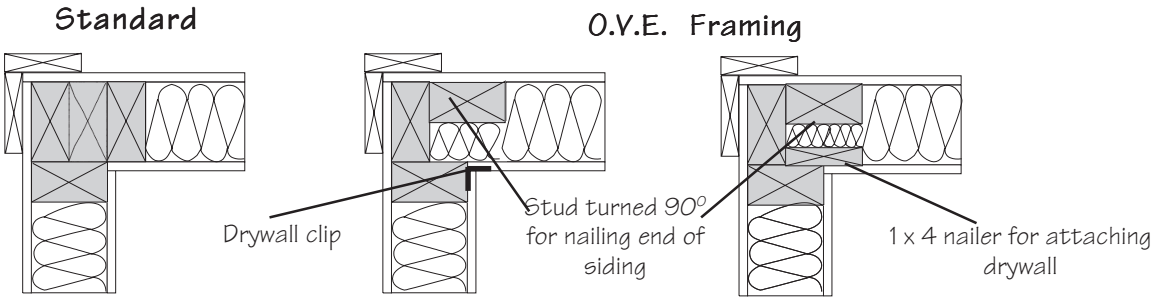

Partition Wall Framing

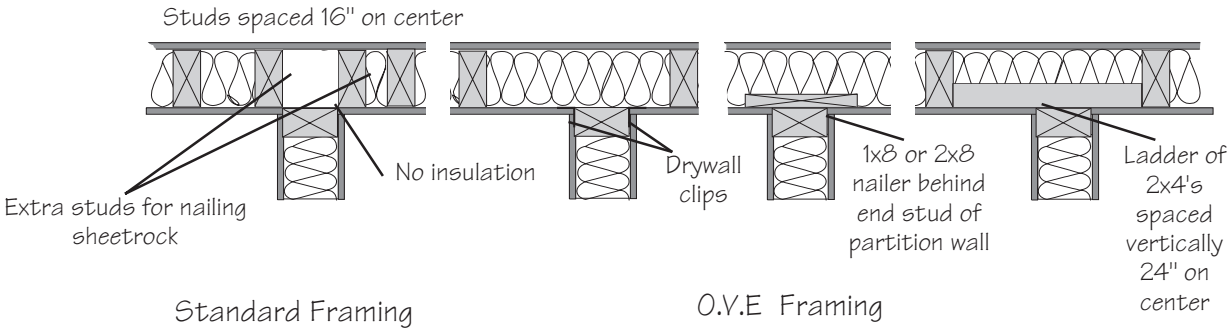

Eliminating Second Top Plate

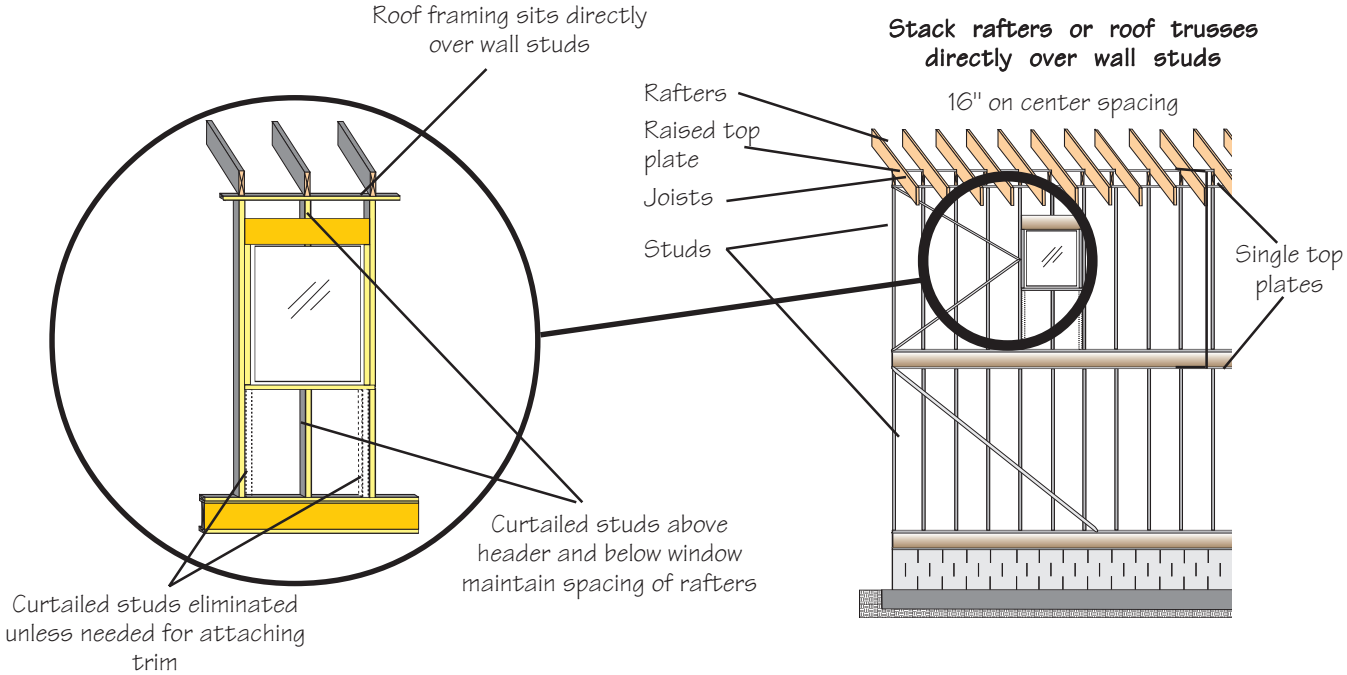

Figure 5-15
Standard Framing versus O.V.E. Framing
Standard Framing (16" on center)--10 foot wall

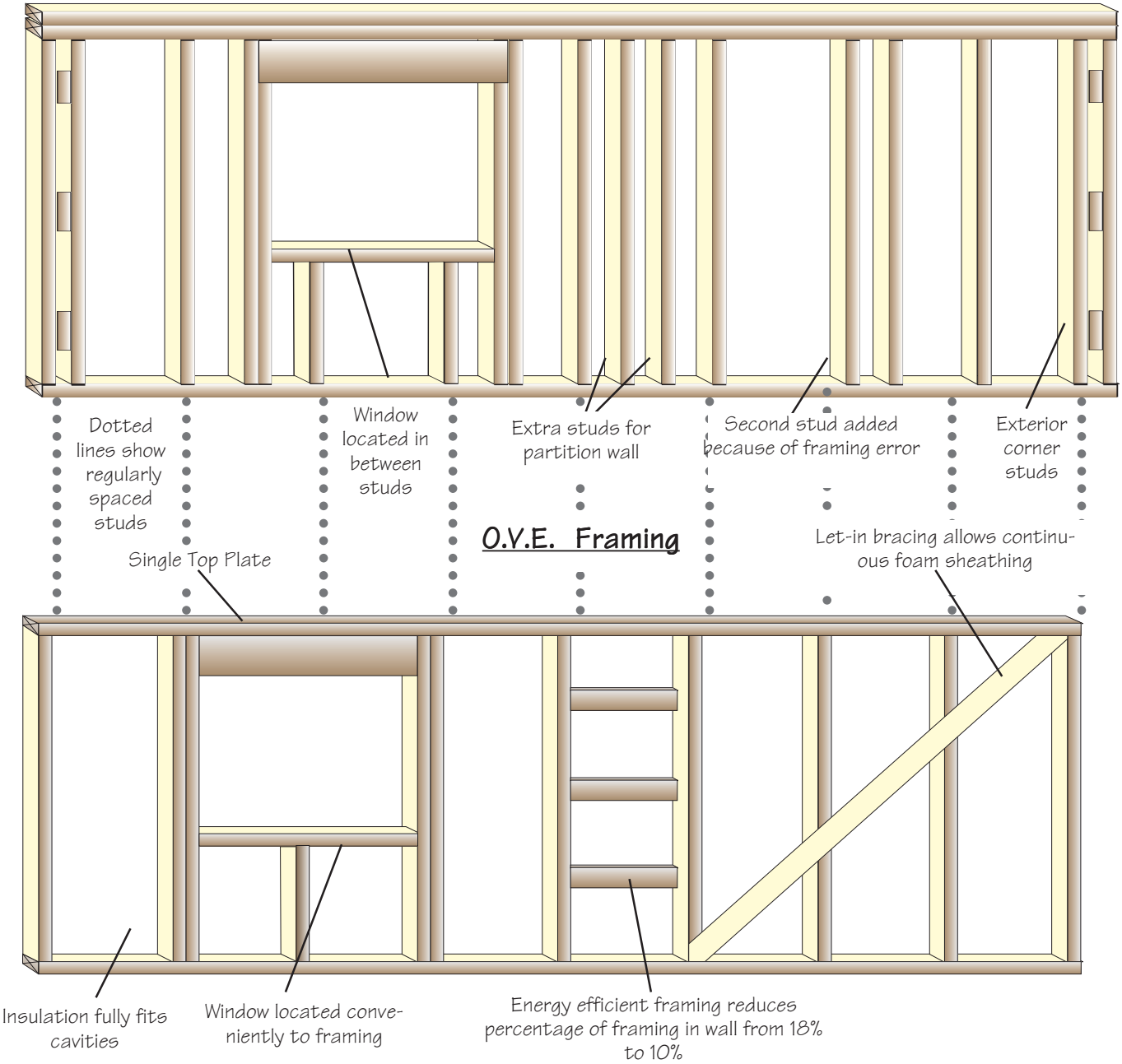

Comparison	Standard	Energy Efficient
Insulation Voids	**3%**	**0%**
Framing factor	**15-25%**	**10-15%**
Batt R-value	**R-13**	**R-13**
Sheathing R-value	**R-0.5 to 2.5**	**R-2.5**
Average R-value	**R-11.1**	**R-14.6 (30% higher)**

Figure 5-16
Insulating Walls With Batts

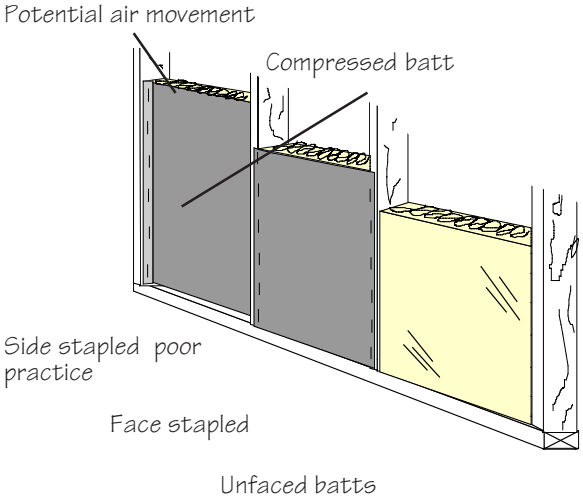

Avoid side stapling

Walls are usually insulated with fiberglass batts that have an attached vapor retarder facing. The facing material has a flange that is often stapled to the sides of the studs in order to leave the face of the studs bare so that the drywall subcontractor can glue sheetrock to the wall studs. Gluing drywall requires fewer fasteners, thus saving on both installation and finishing costs. It can also reduce callbacks due to nail popping.

Unfortunately, as shown in Figure 5-16, side stapling can compress the insulation and create an air space between the insulation and the interior finish, which allows cold air to circulate within the wall cavity. The combined effect of the compressed insulation and air circulation can reduce the effective insulating value of a R-13 batt to a value below R-10.

Face stapling the batt ensures that the insulation will completely fill the stud cavity and minimize air circulation. However, it forms a continuous interior vapor barrier, which is not desirable in Louisiana. Instead, use unfaced batts.

Unfaced batts are slightly larger than the standard 16- or 24-inch stud spacing and rely on a friction-fit for support. Since unfaced batts are not stapled, they can often be installed in less time. In addition, it is easier to cut unfaced batts to fit around wiring, plumbing, and other obstructions in the walls.

Blown loose-fill insulation

Many contractors select loose-fill cellulose, fiberglass, cotton, and rock wool to insulate walls. The insulation is often installed with a blowing machine and held in place with a glue binder or netting. This blown insulation can provide good insulation coverage in the stud cavities; however, it is important to allow excess moisture in the binder to evaporate before the wall cavities are enclosed by the interior finish.

Loose-fill materials with high densities, such as cellulose installed at a density of three to four pounds per cubic foot, not only provide good insulation, but also seal air leaks. Fiberglass is less dense than cellulose and does not provide as much resistance to air circulation. The additional benefits of air sealing must be considered when evaluating the economics of foam insulation, or cellulose or rock wool when installed in a dense-pack fashion.

Figure 5-17
Blown Sidewall Insulation Options

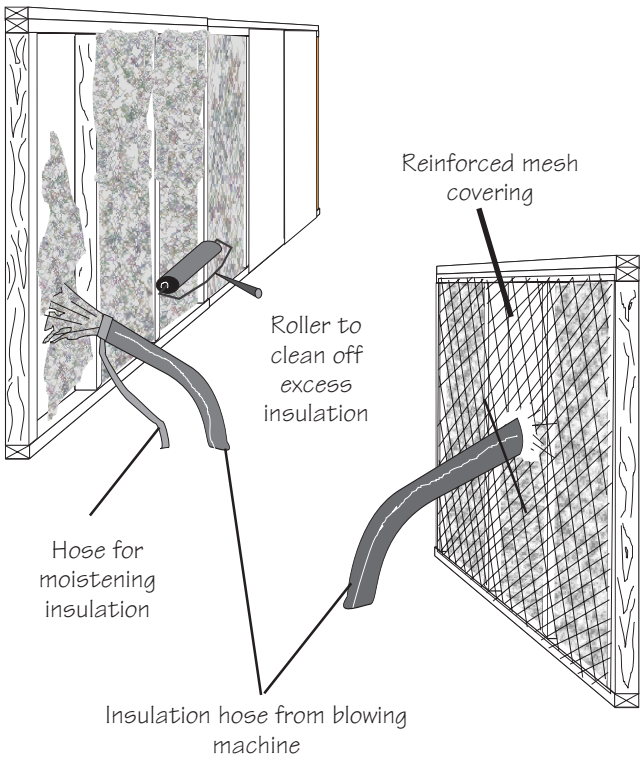

Figure 5-18
Blown Foam Insulation

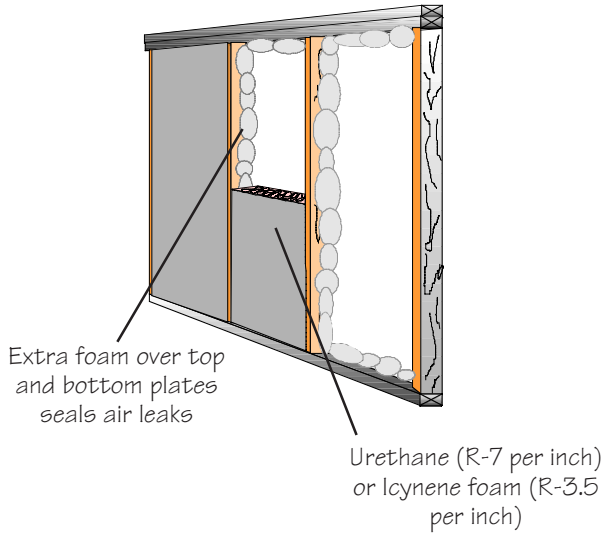

Figure 5-19
Structural Insulated Panels (SIP)

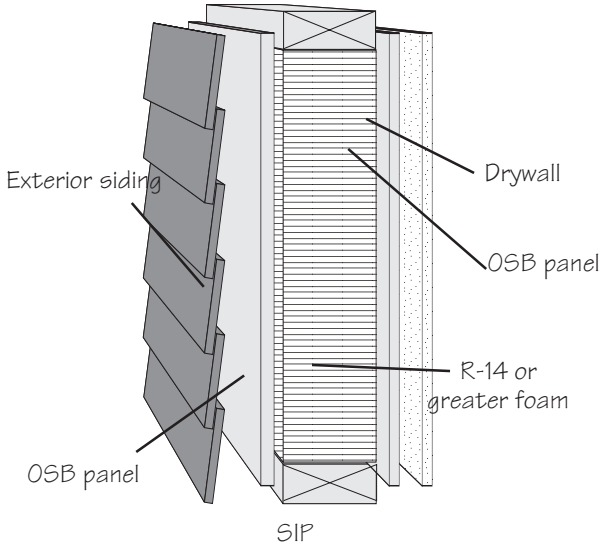

Blown foam insulation

Some insulation contractors are now blowing polyurethane or icynene insulation into walls of new homes. This technique provides high R-values in relatively thin spaces and seals air leaks effectively. The economics of foam insulation should be examined carefully before deciding on its use.

Structural insulated panels

Another approach to wall construction is the use of structured insulated panels (SIP), also known as stress-skin panels. They consist of 4-inch or 6-inch thick foam panels onto which sheets of structural plywood or oriented strand board (OSB) have been glued. They reduce labor costs, and because of the reduced framing in the wall, have higher R-values and less air leakage than standard walls.

SIP's are 4-feet wide and generally 8 to 12-feet long. There are a wide variety of manufacturers, each with its own method of attaching panels together. Procedures for installing windows, doors, wiring, and plumbing have been worked out by each manufacturer. In addition to their use as wall framing, SIP's can also form the structural roof of a building.

Homes built with SIP's are usually more expensive than those with standard framing and insulation. However, research studies have shown they have higher average insulating values and less air leakage.

Metal framing

Builders and designers are well aware of the increasing cost and decreasing quality of framing lumber. As a consequence, interest in alternative framing materials, such as metal framing, has grown. While metal framing offers advantages over wood such as consistency of dimensions, lack of warping, and resistance to moisture and insect problems, it has distinct disadvantages from an energy perspective.

Metal framing serves as an excellent conductor of heat. Homes framed with metal studs and plates usually have metal ceiling joists and rafters as well. Thus, the entire structure serves as a highly conductive thermal grid. Insulation placed between metal studs and joists is much less effective due to the extreme thermal bridging that occurs across the framing members.

There have been moisture-related problems in metal frame buildings in Louisiana that do not use insulated sheathing on exterior walls. Metal studs cooled by the air conditioning system can cause moisture in outdoor air to condense on the exterior sheathing and cause mildew streaks. Similar problems can also occur on interior walls in winter.

The American Iron and Steel Institute is well aware of the challenges involved in building an energy efficient steel structure. In their publication *Thermal Design Guide for Exterior Walls* (Publication RG-9405), the Institute provides information on the thermal perfor-

Table 5-6
Effective Steel Wall R-values

Cavity Insulation	Sheathing	Effective Overall R-value
11	2.5	9.5
11	5	13
11	10	18
13	2.5	10
13	5	14

mance of steel-framed homes. Table 5-6 shows the impact of metal framing on the effective insulating value of walls. Even in walls with insulating foam sheathing, R-values drop 18% to 27% when substituting metal framing for wood.

Researchers have delved into numerous ways to provide for a thermal break in walls with steel framing. The most effective solution has been to increase the insulating value of the sheathing. However, the home still suffers considerable conduction losses up to the attic if the ceiling joists and rafters are steel-framed. The best solution to the heat gain through steel framing in attics is to install a thermal break, such as a sill sealer material between wall framing and ceiling joists. Then, install a layer of foam sheathing underneath the ceiling joists before installing drywall.

Wall Sheathings

Many Louisiana builders use 1/2 inch wood sheathing (R-0.6) or asphalt-impregnated sheathing, usually called blackboard (R-1.3), to cover the exterior walls of a building before installing the siding. Instead, use 1/2-inch expanded polystyrene (R-2), extruded polystyrene (R-2.5 to 3), polyisocyanurate or polyurethane (R-3.4 to 3.6) foam insulated sheathing.

Advantages of foam sheathing over wood or blackboard include:

- ❒ Saves energy
- ❒ Easier to cut and install
- ❒ Protects against condensation (Figure 5-20)
- ❒ Less expensive than plywood

The recommended thickness of the sheathing is based on the desired R-value and the jamb design for windows and doors -- usually 1/2 inch. Be certain that the sheathing completely covers the top plate and band joist at the floor. Most manufacturers offer sheathing products in 9 or 10-foot lengths to allow complete coverage of the wall. Once it is installed, patch all holes.

Figure 5-20
Foam Sheathing Keeps Walls Warmer

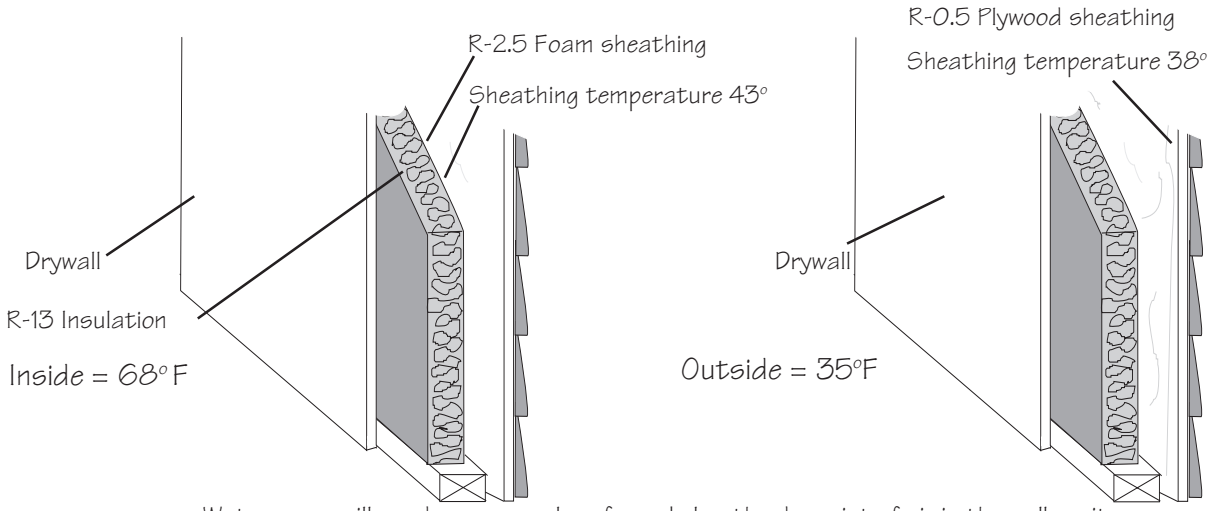

Water vapor will condense on cool surfaces below the dewpoint of air in the wall cavity.
The foam sheathing is 5° warmer, thus helping prevent condensation.

Figure 5-21
Structural Insulated Panels Construction

1

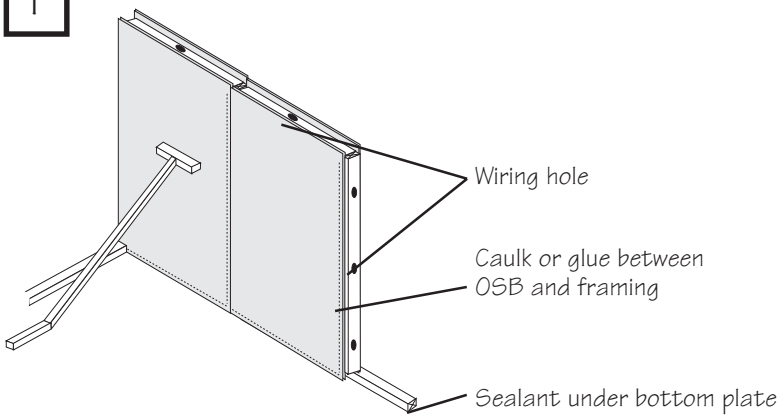

- ❒ Install first panel on top of bottom plate — caulk in place
- ❒ Be careful to install panel plumb and level

2

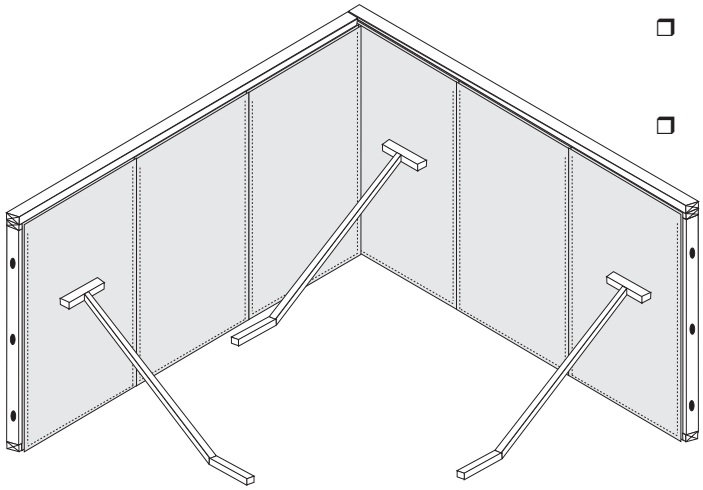

- ❒ Continue installing panels, caulking all seams, and checking for plumb and level
- ❒ Install continuous top plate

3

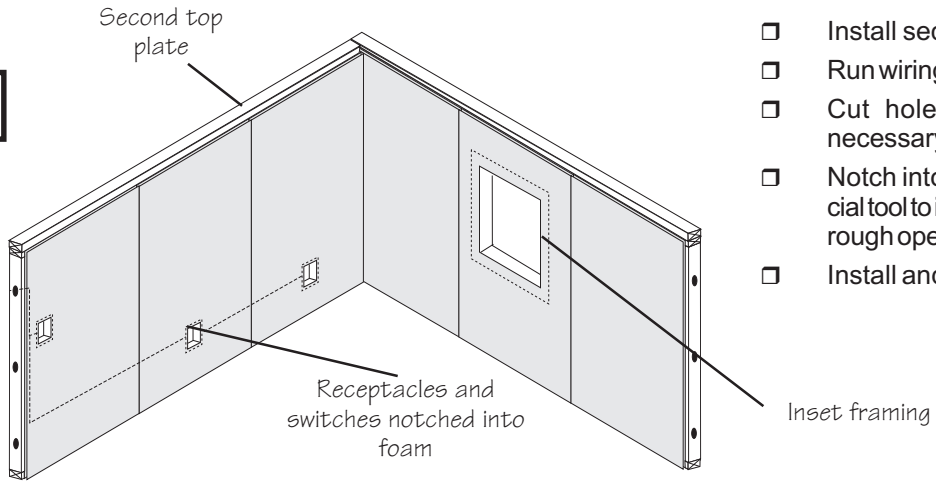

- ❒ Install second top plate
- ❒ Run wiring
- ❒ Cut holes for windows, if necessary
- ❒ Notch into foam using a special tool to inset framing around rough openings
- ❒ Install and caulk framing

Table 5-7
Sheathing Costs*

Sheathing	Cost ($)	R-Value
1/2" blackboard	349	1.3
1/2" beadboard (MEPS)	349	2.0
1/2" oriented strand board (OSB)	369	0.60
1/2" extruded polystyrene	480	2.5
1/2" polyisocyanurate	480	3.5 - 3.7

* For an 2,000 square-foot home using 64 sheets of 4 x 8 material.

Because of its insulating advantages over plywood, use foam sheathing over the entire exterior wall. Rather than installing plywood sheathing in the corners for structural support, use let-in 1 x 4 bracing or metal T-bracing and foam sheathing.

2x6 Wall Construction

There has been some interest in northern Louisiana about the use of 2x6's for construction. In most code jurisdictions, 2x6's can be spaced on 24-inch centers, rather than 16-inch centers used for 2x4's. The advantages of using wider wall framing are:

- ❒ More space provides room for R-19 or R-21 wall insulation.
- ❒ Thermal bridging across studs is less of a penalty due to the higher R-value of 2x6's.
- ❒ Less framing reduces labor costs.
- ❒ There is more space for insulating around piping, wiring, and ductwork.

Disadvantages of 2 x 6 framing include:

- ❒ Wider spacing may cause the interior or exterior finish to bow slightly between studs.
- ❒ Window and door jambs are wider and can add $12 to $15 per opening for jamb extenders.
- ❒ Walls with large window and door areas may require almost as much framing as 2x4 walls, leaving less space for insulation.

Figure 5-22
Let-In Bracing

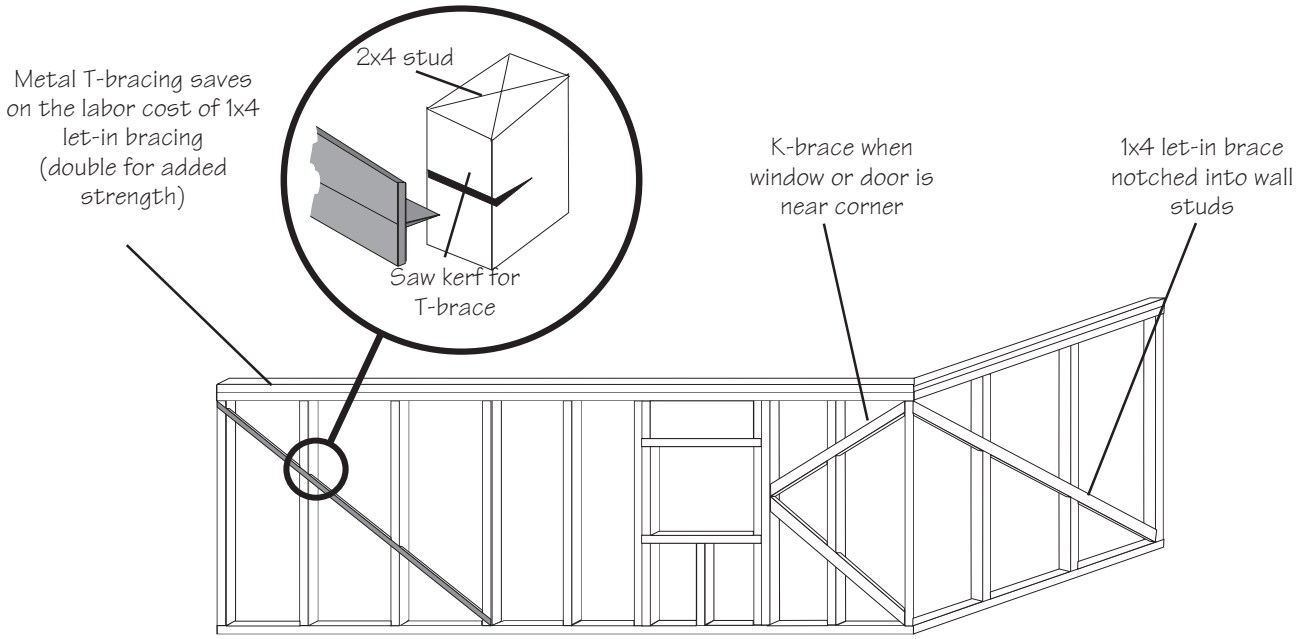

The economics of 2x6 wall insulation depend on the number of windows in the wall, since each window opening adds extra studs and requires the purchase of a jamb extender. Figure 5-23 compares 2x4 and 2x6 framing. Walls built with 2x6's having few windows may provide a positive economic payback in northern Louisiana. However, in walls where windows make up over 7.5% of the total area, the economics become questionable because of the cost of jamb extenders and the minor improvement in average wall R-value.

Figure 5-23
Average Wall R-Value

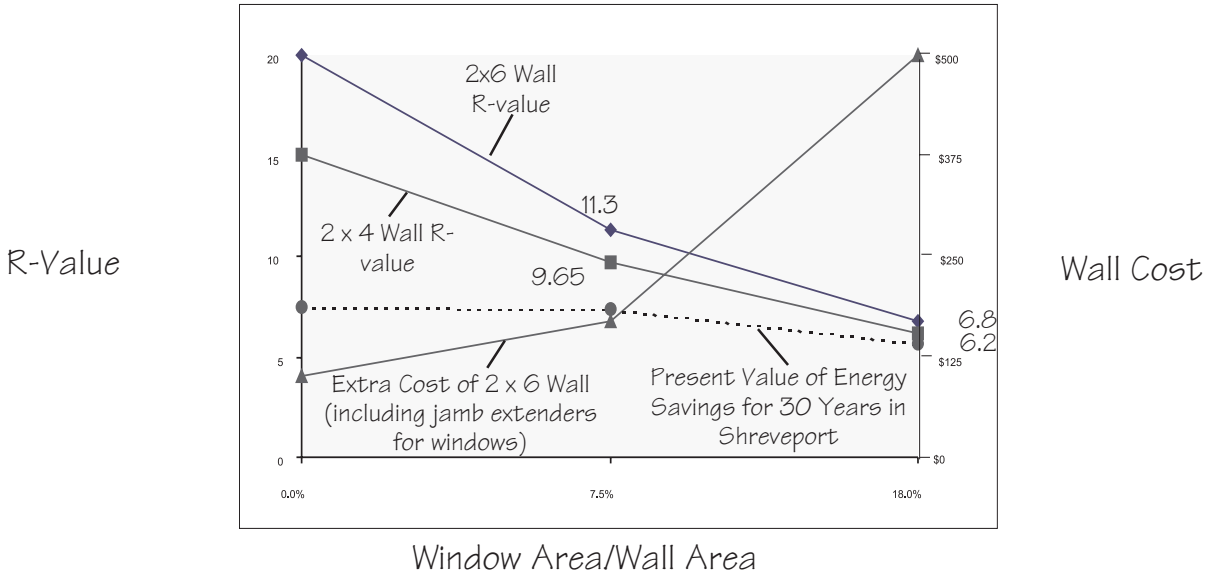

Table 5-8
Economics of Wall Insulation*
(Compared to R-11 Batts with fair installation)

	Energy Savings ($/yr)	Extra Installed Costs ($)	Annual Rate of Return	Extra Mortgage Costs ($/yr)
2x4 Wall				
R-11 Batts, properly installed, energy details	9	48	21.0%	4
R-13 Batts	14	100	16.0%	8
R-15 Batts	34	400	9.4%	32
R-14 Cellulose Insulation (reduced air leakage)	54	400	15.2%	32
R-13 Batts, R-2.5 continuous sheathing	34	280	13.7%	22
2x6 Wall				
R-19 Batts	53	420	14.2%	34
R-21 Batts, R-2.5 continuous sheathing	68	780	9.8%	62
Structural Insulated Panels (SIP)				
4" SIP, R-14 (reduced air leakage)	105	814	14.5%	65

*For a home with a 2,000 square-foot floor located in Baton Rouge. Analysis assumes 2% annual fuel price escalation; mortgage is 30-year, 7% loan; the energy savings were estimated using REMRate v. 8.3 software.

CEILINGS AND ROOFS

Attics over flat ceilings are usually the easiest part of a home's exterior envelope to insulate. They are accessible and have ample room for insulation. However, many homes have cathedral ceilings that provide little space for insulation. It is important to insulate both types of ceilings properly.

Attic Ventilation

In winter, properly designed roof vents expel moisture which could otherwise accumulate and deteriorate insulation or other building materials. In summer, ventilation reduces roof and ceiling temperatures, thus saving on cooling costs and lengthening the roof's life.

Is ventilation necessary?

At present, building science experts are questioning whether attic ventilation is beneficial. For years, researchers have believed the cooling benefits of ventilating a well insulated attic are negligible. However, some experts are now questioning whether ventilation is even effective at moisture removal. Until the results of current research have been accepted, builders should follow local code requirements, which usually dictate attic ventilation.

Unvented attics

Unventilated attics can provide durable, energy efficient structures if using structural insulated panels or aerated concrete panels as the roofing system of the structure. Some builders have opted to pack the rafter space in cathedral ceilings completely with high density insulation, such as cellulose or rock wool and eliminate attic ventilation. However, this approach will avoid moisture problems only with careful installation and detailing.

Vent selection

If ventilating the roof, locate vents high along the roof ridge and low along the eave or soffit. Vents should provide air movement across the entire roof area. There are a wide variety of products available including ridge, gable, soffit, mushroom, and turbine vents.

Figure 5-24
Ridge and Soffit Vents

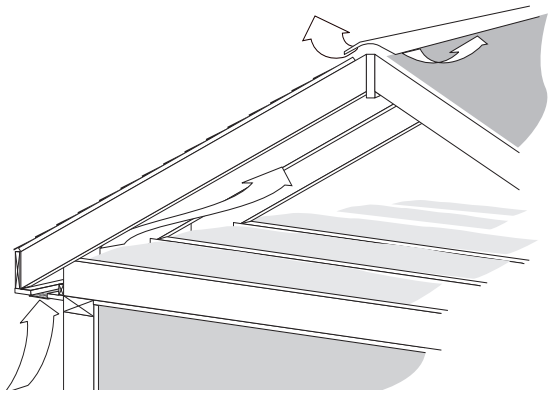

The combination of continuous ridge vents along the peak of the roof and continuous soffit vents at the eave provides the most effective ventilation. Ridge vents come in a variety of colors to match any roof. Some brands are made of corrugated plastic that can be covered by cap shingles to hide the vent from view.

Guidelines for attic/roof ventilation

The amount of attic ventilation needed is determined by the size of the attic floor and the amount of moisture entering the attic. General guidelines are:

- ❒ 1 square foot of attic vent for each 150 square feet of attic floor area without a ceiling vapor barrier, such as the backing on batt insulation, or 1 square foot of vent for each 300 square feet if there is a vapor retarder.
- ❒ The total vent area should be divided equally between high and low vents; thus, if 5 total square feet of vent are needed, locate 2.5 square feet at the ridge and another 2.5 square feet at the soffit.
- ❒ Only the net free area is effective — about

Figure 5-25
Pressure Problems Due to Powered Attic Ventilators

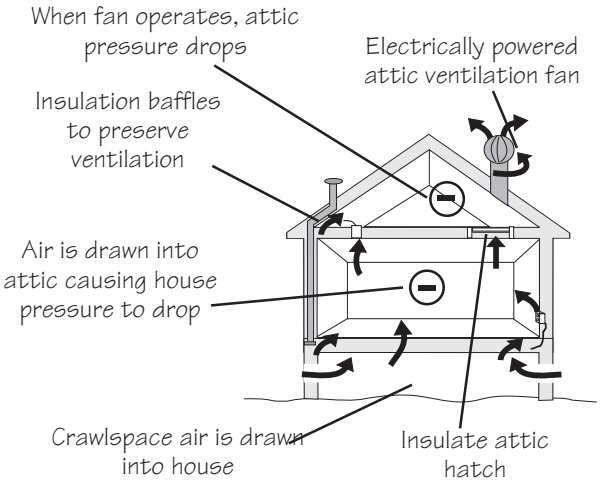

70% of the total vent area (discounts the louvers and flange of the vents).

Powered attic ventilator problems

Electrically powered roof ventilators can consume more electricity to operate than they save on air conditioning costs and are not recommended for most designs. Power vents can create negative pressures in the home which may have detrimental effects such as:

- ❒ Drawing air from the crawlspace into the home
- ❒ Removing conditioned air from the home through ceiling leaks and bypasses
- ❒ Pulling pollutants such as radon and sewer gases into the home
- ❒ Backdrafting fireplaces and fuel-burning appliances

Attic Floor Insulation Techniques

Either loose-fill or batt insulation can be installed on an attic floor. Batts with attached vapor retarders should be installed with the backing next to the ceiling.

Table 5-9
Typical Attic Insulation Costs ($/sq ft)

R-19 Batt Insulation	0.55
R-30 Batt Insulation	0.75
R-19 Blown Insulation	0.30
R-25 Blown Insulation	0.34
R-30 Blown Insulation	0.38
R-38 Blown Insulation	0.42
R-19 Blown with Radiant Heat Barrier	0.43 - 0.75

As shown in Table 5-9, blowing loose-fill attic insulation — fiberglass, rock wool or cellulose — is usually less expensive than installing batts or rolls.

Steps for installing loose-fill attic insulation:

1. Seal attic air leaks, as prescribed by fire and energy codes.
2. Follow manufacturers clearance requirements for heat-producing equipment found in an attic, such as flues or exhaust fans. Other blocking requirements may be mandated by local building codes. Use either metal flashing, plastic or cardboard baffles, or pieces of batt insulation for blocking. Attic blocking requirements are shown in Figure 5-26 on the next page.
3. Use cardboard baffles, insulation batts, or other baffle materials to preserve ventilation from soffit vents at eave of roof.
4. Insulate the attic hatch or attic stair. There are foam boxes for providing a degree of insulation over a pull-down attic stairway.
5. Determine the attic insulation area. Based on the spacing and size of the joists, use the chart on the insulation bag to determine the number of bags to install. Table 5-10 shows a sample chart for cellulose insulation.
6. Avoid fluffing the insulation (blowing with too much air) by using the proper air-to-insulation mixture in the blowing machine. A few insula-

Figure 5-26
Attic Blocking Requirements

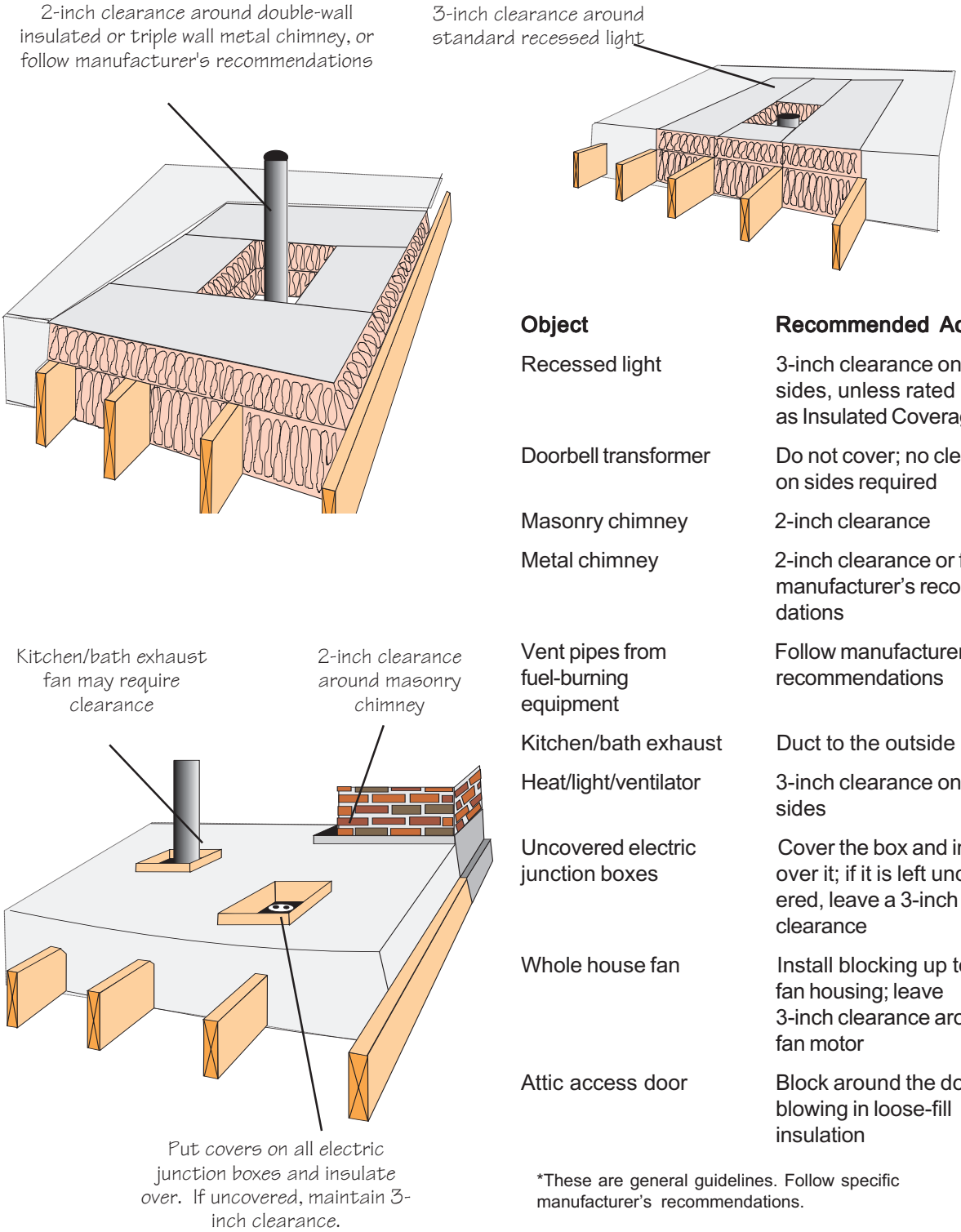

Object	Recommended Action*
Recessed light	3-inch clearance on all sides, unless rated as Insulated Coverage (IC)
Doorbell transformer	Do not cover; no clearance on sides required
Masonry chimney	2-inch clearance
Metal chimney	2-inch clearance or follow manufacturer's recommendations
Vent pipes from fuel-burning equipment	Follow manufacturer's recommendations
Kitchen/bath exhaust	Duct to the outside
Heat/light/ventilator	3-inch clearance on all sides
Uncovered electric junction boxes	Cover the box and insulate over it; if it is left uncovered, leave a 3-inch clearance
Whole house fan	Install blocking up to the fan housing; leave 3-inch clearance around fan motor
Attic access door	Block around the door if blowing in loose-fill insulation

*These are general guidelines. Follow specific manufacturer's recommendations.

Table 5-10
Typical Blowing Chart for Loose-Fill Insulation (Cellulose Insulation Example)

			2 x 6 Joists Spaced 24 Inches on Center		2 x 6 Joists Spaced 16 Inches on Center	
R-value at 75° F	Minimum Thickness (in)	Minimum Weight (lb/ft²)	Coverage per 25-lb. bag (sq ft)	Bags per 1,000 sq ft	Coverage per 25-lb bag (sq ft)	Bags per 1,000 sq ft
R-40	10.8	2.10	12	83	13	77
R-32	8.6	1.60	16	63	18	56
R-24	6.5	.98	21	48	23	43
R-19	5.1	.67	37	27	41	24

tion contractors have "fluffed" (added extra air to) loose-fill insulation to give the impression of a high R-value. The insulation may be the proper depth, but if too few bags are installed, the R-values will be less than claimed.

7. Obtain complete coverage of the blown insulation at similar insulation depths. Use attic rulers to ensure uniform depth of insulation.

Steps for installing batt insulation

1. Seal attic air leaks, as prescribed by fire and energy codes.

2. Block around heat-producing devices, as described in Step 2 for loose-fill insulation.

3. Insulate the attic hatch or attic stair as described in Step 4 for loose-fill insulation.

4. Determine the attic insulation area based on the spacing and size of the joists; order sufficient R-30 insulation for the flat attic floor. Choose batts that are tapered cut— wider on top — so that they cover the top of the ceiling joists. (Figure 5-27)

5. When installing the batts, make certain they completely fill the joist cavities. Shake batts to ensure proper loft. If the joist spacing is uneven, patch gaps in the insulation with scrap pieces. Try not to compress the insulation with wiring, plumbing, or ductwork. In general, obtain complete coverage of full-thickness, non-compressed insulation.

6. Attic storage areas can pose a problem. If the

Figure 5-27
Full Width Batts

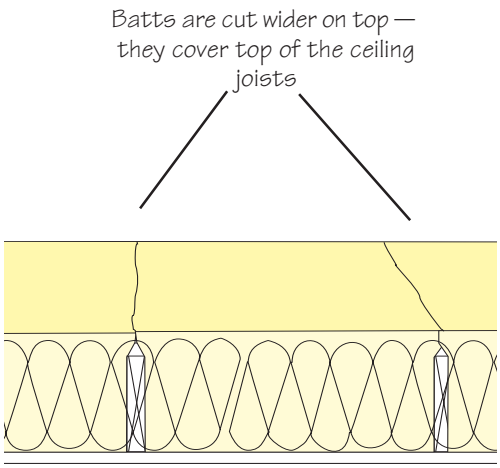

Figure 5-28
Insulating under Attic Floors

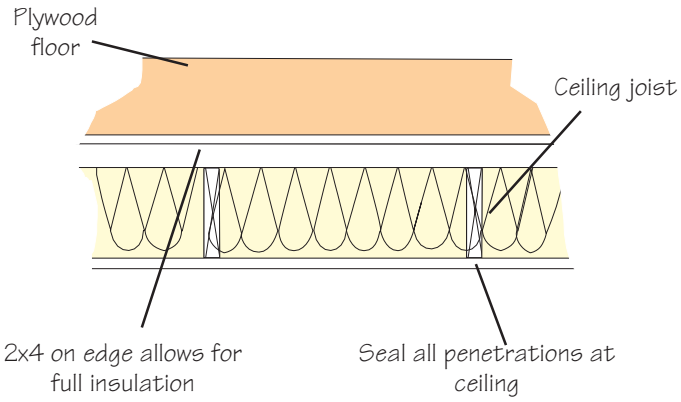

Figure 5-29
Insulation Options for Eaves

Truss Roof

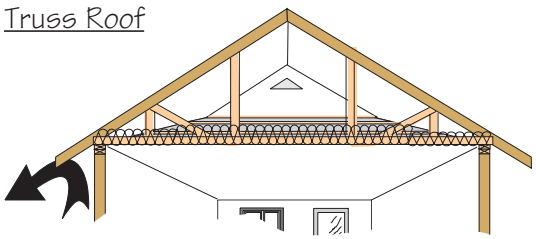

Problem
Roof deck compresses insulation and blocks air flow from soffit vent

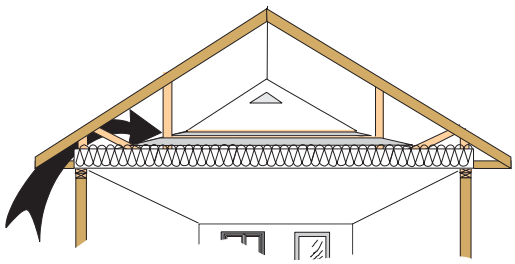

Solution — raised heel trusses
Insulation not compressed; air flow path is open

Wood-Framed Roof

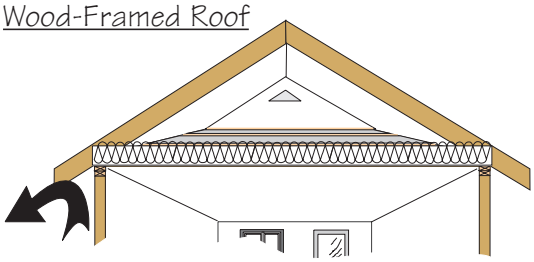

Problem
Roof compresses insulation at eave and blocks air flow from soffit vent

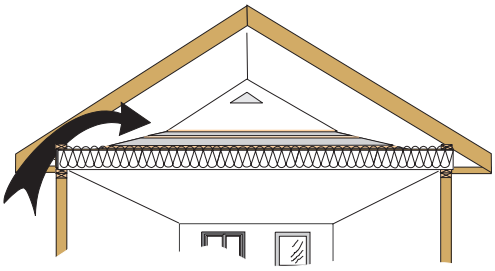

Solution — raised top plate
Insulation not compressed; air flow path is open

ceiling joists are shallower than the depth of the insulation (generally less than 2x10's), raise the finished floor using 2x4's or other spacing lumber. Install the batts before nailing the storage floor in place. (Figure 5-28)

Increasing the roof height at the eave

One problem area in many standard roof designs is at the eave, where there is often insufficient space for full insulation without blocking air flow from the soffit vents. If the insulation is compressed, its R-value will decline. Figure 5-29 shows several solutions to this problem. If using a truss roof, purchase *raised heel trusses* that form horizontal overhangs. They should provide clearance for both ventilation and insulation.

In stick-built roofs, where rafters and ceiling joists are cut and installed at the construction site, an additional top plate that lays across the top of the ceiling joists at the eave will prevent compression of the attic insulation. The rafters sitting on this *raised top plate* allow for both insulation and ventilation.

The raised top plate design also minimizes *windwashing* of the attic insulation -- where air entering the soffit vents flow through the attic insulation. When installing a raised top plate, most framing crews also place a band joist over the open joist cavities of the roof framing. The band joists help prevent windwashing, which can reduce attic insulation R-values on extremely cold days and can add moisture to the insulation.

Raised top plates also elevate the overhang of the home, which may enhance the building's attractiveness. The aesthetic advantage is especially useful in one-story homes with standard 8-foot ceilings.

Problems with recessed lights

Standard recessed fixtures require a clearance of several inches between the sides of the lamp's housing and the attic insulation. In addition, insulation cannot be placed over the fixture. Even worse, recessed lights create air leaks between attics and the home.

IC-rated fixtures have a heat sensor switch which allows the fixture to be covered with insulation. However, these units also leak air. Airtight, IC-rated fixtures

Table 5-11
Economics of Attic Insulation*

	Energy Savings ($/yr)	Extra Installed Costs ($)	Annual Rate of Return	Extra Mortgage Costs ($/yr)
Compared to R-11 Batt Insulation:				
R-15 Batts	25	300	7%	24
R-19 Batts	43	400	11%	32
Compared to R-19 Blown Insulation:				
R-25 Blown Insulation	14	80	18%	6
R-30 Blown Insulation	23	160	15%	13
R-38 Blown Insulation	29	240	13%	19
R-50 Blown Insulation	38	400	9%	32
R-19 Blown Insulation and Radiant Heat Barrier	47	380	13%	30

*For a home with a 2,000 square-foot attic located in Baton Rouge. Analysis assumes 2% annual fuel price escalation; mortgage is 30-year, 7% loan; the energy savings were estimated using REMRate v. 8.3 software.

are now required by the 1995 Model Energy Code and the International Energy Conservation Code. Alternatives to recessed lights include surface-mounted ceiling fixtures and track lighting, which typically contribute less air leakage to the home.

Figure 5-30
Choose Quality Recessed Lamps

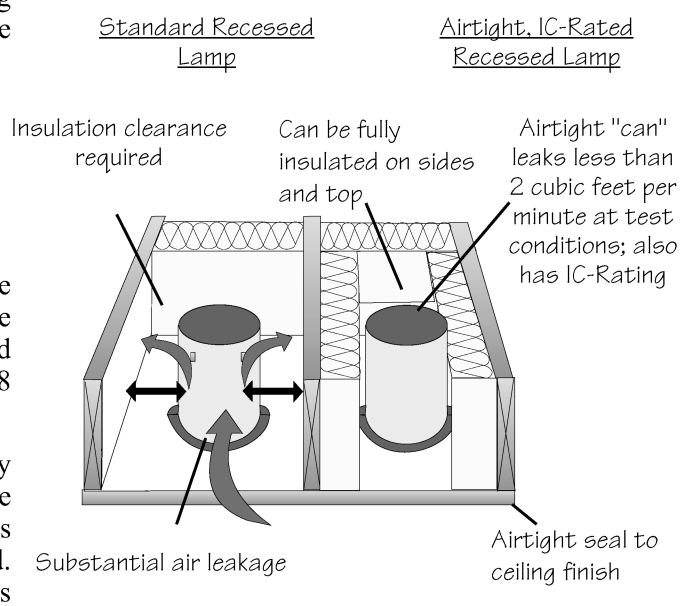

CATHEDRAL CEILING INSULATION TECHNIQUES

Cathedral ceilings are a special case because of the limited space for insulation and ventilation within the depth of the rafter. Fitting in a 10-inch batt (R-30) and still providing ventilation is impossible with a 2x6 or 2x8 rafter.

The International Energy Conservation Code may allow R-19 cathedral ceiling insulation for some house designs, depending on the climatic zone. For most areas of the state, R-25 to R-30 insulation is recommended. Builders may find considerable installation cost savings using R-25 batts; however, they are about the same thickness as high density R-30 batts and would follow the same construction practices as outlined below.

Building R-30 cathedral ceilings

Cathedral ceilings built with 2x12 rafters can be insulated with standard R-30 batts and still have plenty of space for ventilation. Some builders use a *vent baffle* between the insulation and roof decking to ensure that the ventilation channel is maintained.

If 2x12's are not required structurally, most builders find it cheaper to construct cathedral ceilings with 2x10 rafters and high-density R-30 batts, which are 8 1/4-inches thick.

Some contractors wish to avoid the higher cost of 2x10 lumber and use 2x8 rafters. These roofs are usually insulated with R-19 batts. However, 2x10 lumber can be spaced 24 inches on center and may cost little more than 2x8's spaced 16 inches on center.

If framing with 2x6 and 2x8 rafters, insufficient space is available for standard R-30 insulation. Higher insulating values can be obtained by installing rigid foam insulation under the rafters. However, foam is expensive and using thicker rafters with batt or loose fill insulation may be substantially less costly. The rigid foam insulation must be covered with a fire-rated material when used on the interior of the building. Half-inch drywall usually meets the requirement, but you should check with local fire codes or building inspectors for confirmation.

Scissor trusses

Scissor trusses are another cathedral ceiling efficiency framing option. They have a greater roof pitch than ceiling pitch, thus creating more space than standard framing provides between the roof and the ceiling. Make certain they have adequate room for both R-30 insulation and ventilation, especially at their ends, which form the eave section of the roof.

Ceilings with exposed rafters

A cathedral ceiling with exposed rafters or roof decking is difficult and expensive to insulate well. Often, foam insulation panels are used over the attic deck as shown in Figure 5-32. However, to achieve R-30, 4 to 7-inches of foam insulation, costing $1 to $3 per square foot, are needed. Ventilation is also a problem and some shingle manufacturers do not offer product warranties unless the outer roof decking is ventilated.

In homes where exposed rafters are desired, it may be more economical to build a standard, energy effi-

Figure 5-31
Cathedral Ceiling Insulation Options

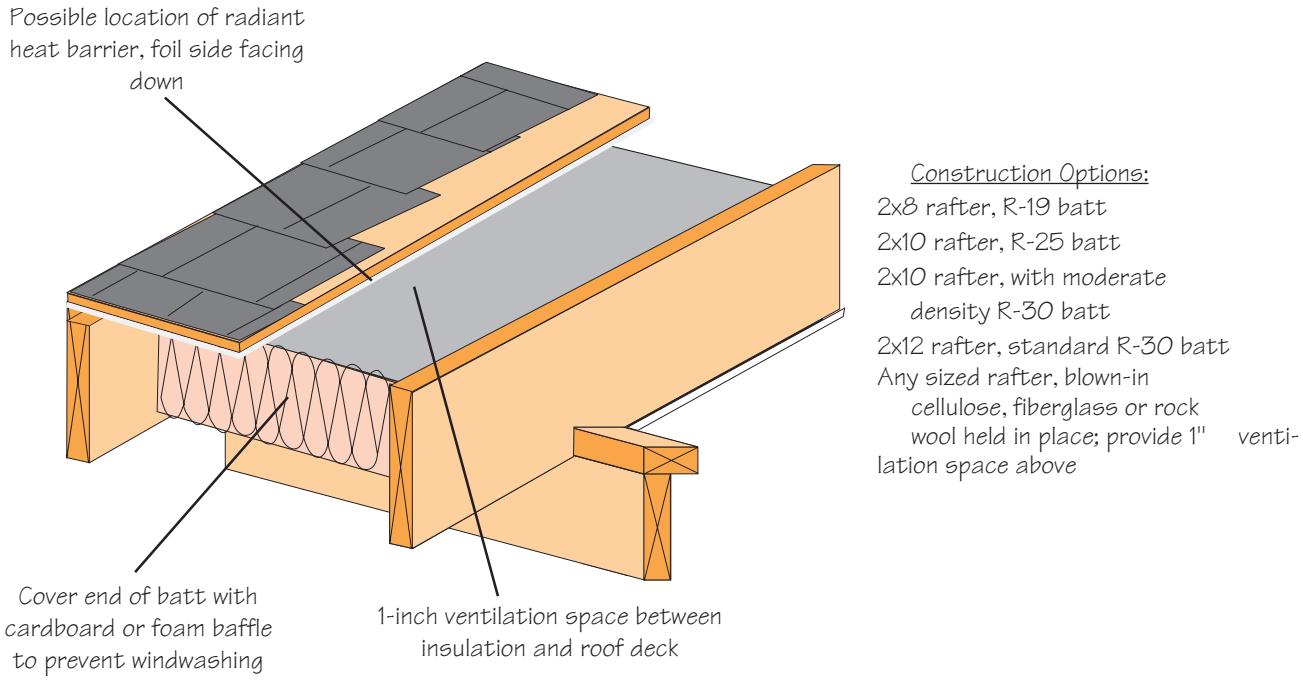

Table 5-12
Economics of
Cathedral Ceiling Insulation*

	Energy Savings ($/yr)	Extra Installed Costs ($)	Annual Rate of Return	Extra Mortgage Costs ($/yr)
Compared to R-11 Batts				
R-19 Batts	25	90	30.1%	7
Compared to R-19 Batts:				
2x10 rafters and R-25 Batts	10	460	n/a	37
R-30 High Density Batts/ 2x10 rafters	18	620	n/a	50
R-26 Structural Insulated Panel	25	1,070	n/a	85

*For a home with 1,000 square-foot of cathedral ceiling located in Baton Rouge. Analysis assumes 2% annual fuel price escalation; mortgage is 30-year, 7% loan; the energy savings were estimated using REMRate v. 8.3 software.

Figure 5-32
Cathedral Ceiling - Exterior Roof Insulation

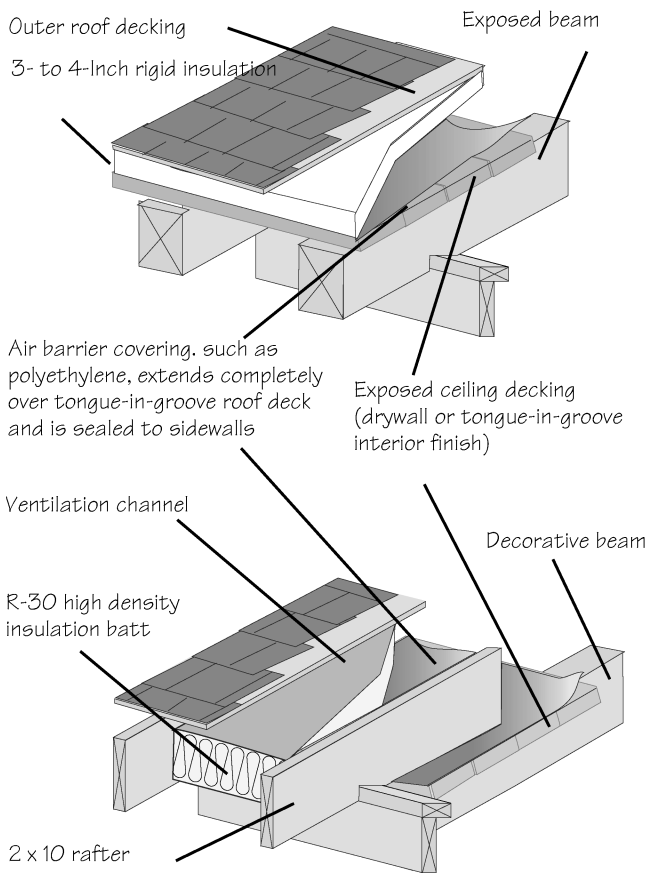

cient cathedral ceiling and then add exposed decorative beams underneath. Note that homes having tongue-and-groove ceilings can experience substantially more air leakage than those with solid, drywall ceilings. Install a continuous air barrier, sealed to the walls, above the tongue-and-groove roof deck.

Radiant Heat Barriers

Radiant heat barriers (RHB) are reflective materials that can reduce summer heat gain in attics and walls. While not generally a substitute for insulation, they can be used in concert with minimum levels of insulation to lower air conditioning costs during warm and hot weather.

The chapter on Natural Cooling provides more detailed information on radiant heat barriers. They have a controversial history in the Southeastern United States because manufacturers oversold their benefits during the late 1980's and early 1990's. In particular, some sales representatives made excessive claims about the performance of the product and priced it too high to provide a reasonable payback.

Radiant heat barriers do not have to be expensive. Many are available for less than $0.15 per square foot. Because RHB's can reduce cooling bills 10% to 20%, inexpensive products can be cost effective. The economic analysis for attics in Table 5-11 shown earlier revealed that RHB materials priced below $0.20 per square foot may offer an attractive payback.

Notes:

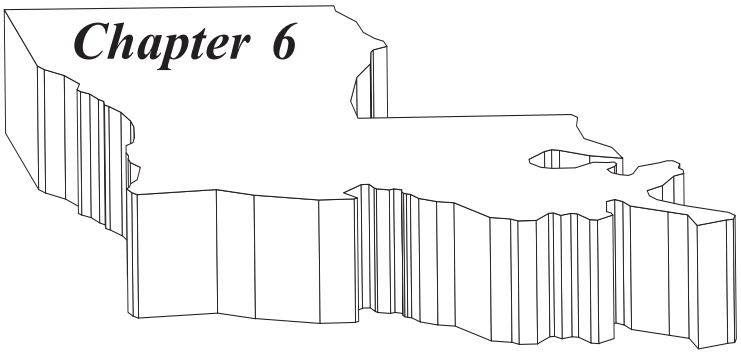

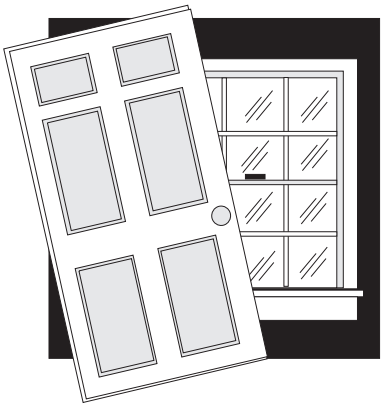

Windows and Doors

Windows connect the interior of a house to the outdoors, provide ventilation and daylight, and are one of the key aesthetic elements. In passive solar homes, windows can provide a significant amount of heat for a house in the winter.

Windows and doors are often the architectural focal point of residential designs, yet they provide the lowest insulating value in the building envelope. Although recent developments in energy efficient products have markedly improved the efficiency of windows, they still pose a major energy liability.

The type, size, and location of windows greatly affect heating and cooling costs. Select good quality windows, but shop wisely for the best combination of price and performance. Many house building budgets have been blown by spending thousands of additional dollars on premium windows with marginal energy savings. In general, if the windows are double-glazed, well-built, and have good weatherstripping, they will serve you well. Check on added features, such as low-emissivity coatings, inert gas fill between glazing layers, and tinted or reflective units —they may provide additional energy savings at relatively low extra cost.

Well designed homes carefully consider window location and size. In summer, unshaded windows can double the costs of keeping a house cool. Year round, poorly designed windows can cause glare, fading of fabrics, and reduced comfort. Chapter 11 on Natural Cooling describes how to shade windows to save even more energy.

Figure 6-1
Window Anatomy

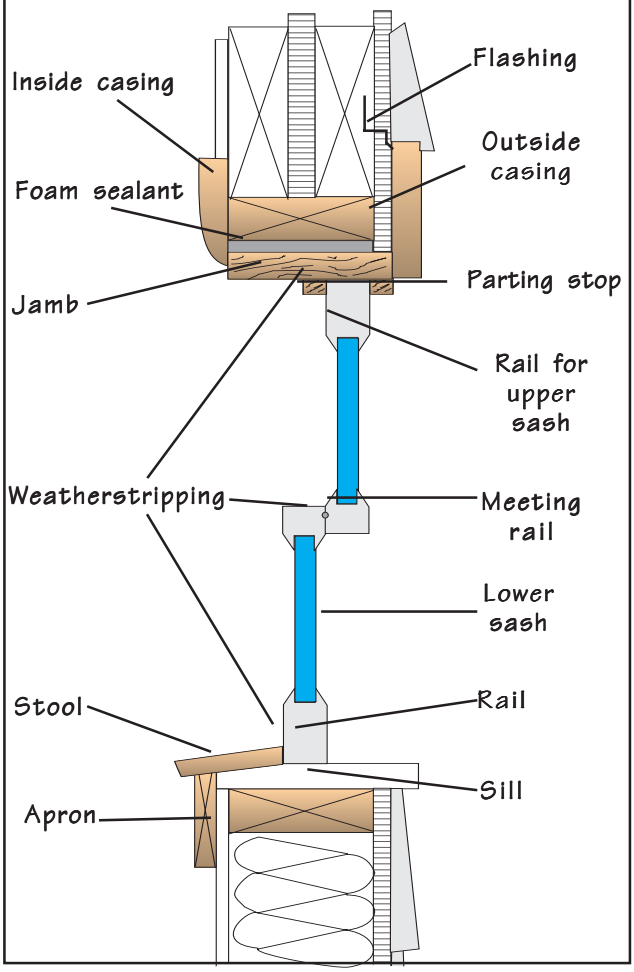

WINDOWS

To understand new window technologies, it is helpful to know how they lose and gain heat:

- ❒ Conduction through the glass, edge, and frame
- ❒ Convection across the air space in double- and triple-glazed units
- ❒ Air leakage around the sashes and the frame
- ❒ Radiant energy from the sun transmitted through the glazing
- ❒ Radiant energy from inside emitted to the night winter sky

Goals of Efficient Windows

- ❒ Good insulating values - low U-values (High R-values) — a minimum of double-glazed glass (U-0.65) with thermal breaks in metal-framed units
- ❒ Low air leakage rates:
  - ❍ less than 0.25 cfm per linear foot of sash opening for double-hung windows
  - ❍ less than 0.10 cfm per linear foot for casement, awning, and fixed windows
- ❒ Moderate to high transmission of visible light (Visible Light Transmission = 50% to 80%)
- ❒ Low transmission rates of ultraviolet and infrared light (Solar Heat Gain Coefficient — SHGC — 0.4 or below)

Figure 6-2
Winter Heat Loss in a Typical Clear Double-glazed Window

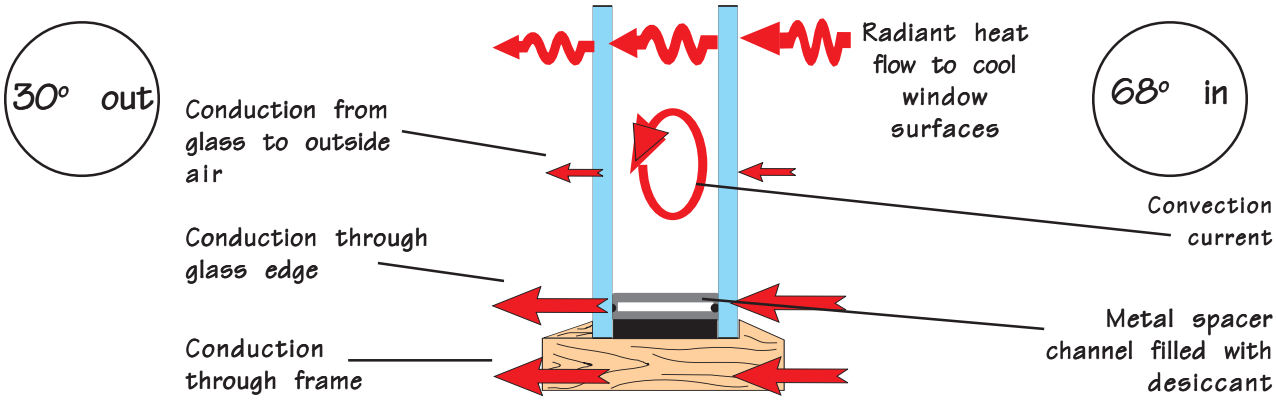

Figure 6-3
Summer Heat Gain in a Typical Double-glazed Window

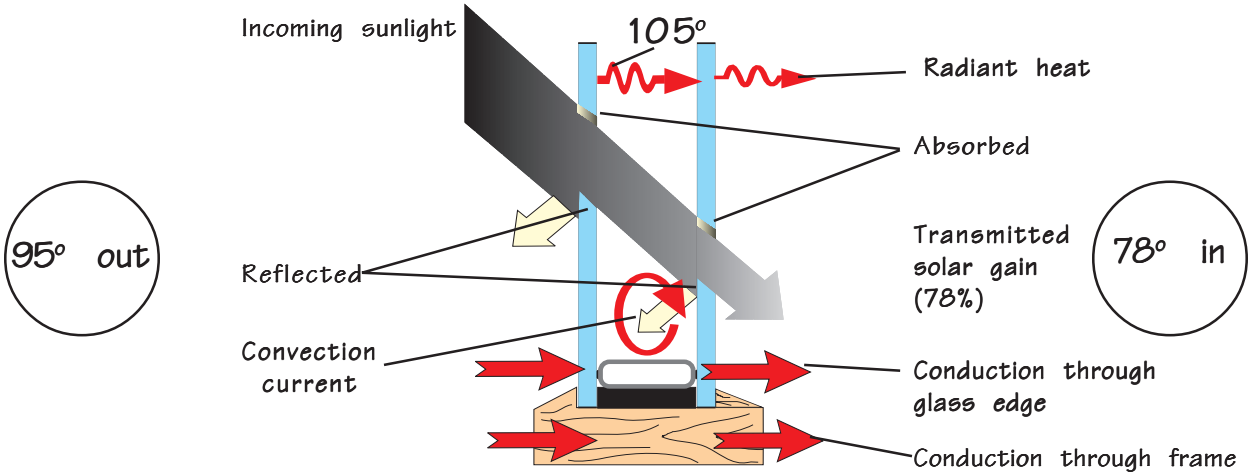

Measurements of Window Performance

When shopping for windows, it's useful to know some of the basic window terminology:

NFRC -- the National Fenestration Rating Council, a national nonprofit organization publishes a directory of windows that have been tested according to their criteria. The NFRC rating system is described later in the chapter. Builders should use windows with an NFRC label, as their listed insulating values and air tightness have been verified by independent laboratories.

R-value and U-value -- ratings given for the insulating values of windows. R-values refer to the resistance to heat flow; therefore, the higher the R-value, the better the insulation. U-values measure the ability of the window to conduct heat and are the inverse of the R-value -- the lower the U-value the better. Standard wood double-glazed windows have R-values of about 2, thus having U-values of 1/2. A typical new window having a low-emissivity coating and an inert gas in the air space might have an R-value of 3.3, or a U-value of about 0.30.

Solar Heat Gain Coefficient -- the fraction of solar heat that actually penetrates a window and enters the living area of a home. A window with a SHGC of 80% lets about 4 times as much solar radiation into a home as a window with a SHGC of 20%. To reduce summer cooling bills, windows with lower SHGC will save money. However, in passive solar homes for heating, these same windows may not provide the savings of clearer window units. Tinted and reflective windows, or units with solar films, have low SHGC ratings.

Shading Coefficient -- an older method of measuring solar heat transfer. This method of indicating the relative solar transmission through windows assigns single-glazed clear windows a Shading Coefficient of 1.0. Double-glazed windows have Shading Coefficients of 0.87. If you know the Shading Coefficient of a window, you can find the SHGC by multiplying the Shading Coefficient by 0.88.

Visible Light Transmittance -- a measure of the percentage of available visible light that penetrates a window.

Infiltration -- the rated air leakage of the window is usually measured in cubic feet per minute of leakage per linear foot of crack around the window unit. Double-hung units are typically the leakiest, while fixed units are the tightest.

Window Types -- Figure 6-4 depicts some of the different window types available on the market today. All types are generally available with wood, pre-primed wood, aluminum clad, and vinyl frames:

Double-hung and single-hung windows -- most traditional, leakiest, only open halfway when ventilating, greatest surface to paint, less expensive.

Fixed windows -- very low air leakage, provide no ventilation, have the least interrupted view, less expensive.

Casement, Awning, and Hopper Windows -- low air leakage, open fully for ventilation but sash may receive direct rainfall, more expensive.

Figure 6-4
Types of Windows

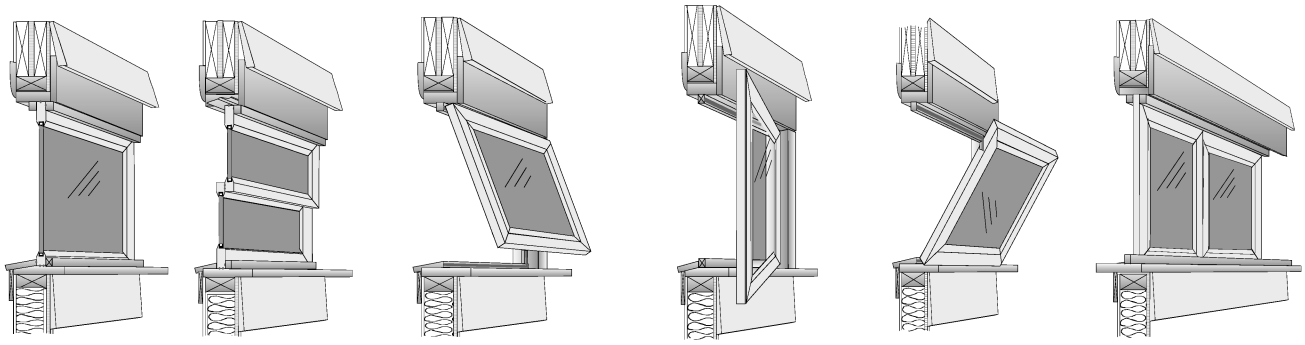

Fixed | Double-hung | Awning | Casement | Hopper or Tilt-out | Sliding

Table 6-1
Cost Comparison of Window Alternatives
(in $/square foot of rough opening)

Type of Window	Builder's Quality	Premium Quality
Single-glazed:		
Double-hung wood	5	11 - 18
Double-glazed:		
Double-hung—wood	8	11 - 18
Double-hung—vinyl or aluminum clad	10	12 - 25
Casement or awning—wood	14 - 18	20 - 27
Casement or awning—aluminum or vinyl clad	19 - 23	25 - 31
Sliding glass door—metal	5 - 8	7 - 10
Sliding glass door—wood	9 - 14	10 - 15
Fixed/hinged operable door combination	n/a	11 - 18

*Windows generally cost about $50 in labor to install. Sealed, double-glazed glass units cost about $2.50 per square foot not including labor and trim, which may run about $7 per square foot of rough opening.

Few windows can meet all of these goals, but in the past several years, the window industry has unveiled an exciting array of higher efficiency products. The most notable developments include:

- ❒ Low-emissivity coatings, which hinder radiant heat flow
- ❒ Tighter weatherstripping systems to lower air leakage rates
- ❒ Inert gas fills, such as argon and krypton, that help deaden the air space between layers of glazing and thus increase the insulating values of the windows
- ❒ Thermal breaks to reduce heat losses through highly conductive glazing systems and metal frames
- ❒ Windows with low transmission rates of radiant and ultraviolet radiation

Figure 6-5
Metal Window Frame With Thermal Break

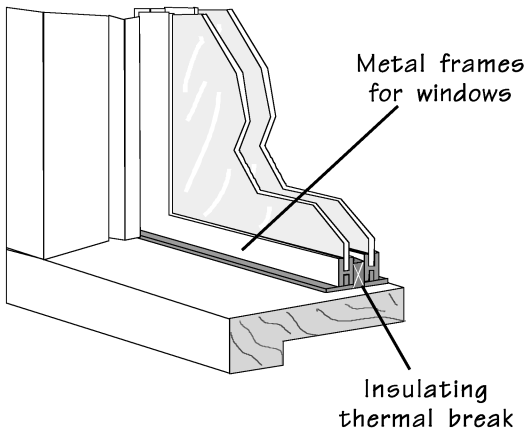

Thermal Breaks and Window Spacers

Thermal breaks in metal window frames are of particular importance. Metal is a very poor insulator—in fact, it is a conductor of heat. A thermal break separates inside and outside pieces of the window frame with an insulating material, thus improving insulating values. Always specify windows with thermal breaks, listed as "T.I.M." (thermally insulated metal) when purchasing metal windows.

When shopping for windows, find out the total U-value, not just that for the glass. Also, ask how the U-values are determined and whether any standard test procedures were used to derive it. It makes no sense to pay top dollar for a window that looks great on paper, but performs poorly in the real world.

Table 6-2
Sample Window Performance Characteristics

Type	U-value	Solar Heat Gain Coefficient	Visible Light Transmission	Infiltration (cfm/lin ft of crack)
DH, 1G, wood *	1.10	0.79	0.90	0.20 - 0.35
DH, 1G, metal	1.30	0.79	0.90	0.50 - 0.98
DH, 2G, wood	0.49	0.58	0.81	0.15 - 0.30
DH, 2G, wood , bronze tint	0.49	0.55	0.61	0.15 - 0.30
DH, 2G, metal (no thermal break)	0.75	0.58	0.81	0.25 - 0.50
DH, 2G, metal (with thermal break)	0.64	0.58	0.81	0.25 - 0.50
CS, 2G, wood	0.45	0.58	0.81	0.07 - 0.15
CS, 2G, vinyl	0.48	0.58	0.81	0.07 - 0.15
CS, 2G, low-e, wood	0.38	0.50	0.74	0.07 - 0.15
CS, 2G, low-e, inert gas fill, wood	0.30	0.50	0.74	0.07 - 0.15
CS, 2G, low-e, inert gas fill, wood, low solar gain coating	0.29	0.31	0.72	0.07 - 0.15
DH, 3G, low-e, inert gas fill, wood	0.24	0.37	0.68	0.15 - 0.30
DH, 4G, low-e, inert gas fill, wood	0.17	0.30	0.62	0.15 - 0.30

* Ratings shown are for the entire window unit, not just the center of glass. Double and triple glass systems have 0.5" air spaces between the layers of glass. DH = Double hung, CS = Casement (awning and hopper would have similar air leakage values, fixed would have lower air leakage). 1G=single glazed, 2G=double-glazed, etc.

LOW - EMISSIVITY COATINGS

Low-e coatings are designed to hinder radiant heat flow through multi-glazed windows. Some surfaces, such as flat black metal used on wood stoves, have high emissivities and radiate heat readily. Other surfaces, such as shiny aluminum, have low emissivities and radiate little heat, even when at elevated temperatures.

Most low-e coatings are composed of a layer of silver applied between two protective layers. The coatings have swept through the window industry. Several window companies rarely sell products without low-e layers applied.

There are many benefits of low-e windows in addition to reducing summer heat gain and winter heat loss. They screen ultraviolet radiation, which can reduce fabric fading. In winter, the inside surface of the glass is warmer, which makes us feel warmer and helps prevent condensation and frosting.

Figure 6-6 shows that window surfaces are numbered -- 1 to 4 from outside to inside for double-paned units. In Louisiana and other areas where cooling is more important than heating, the low-e layer should be on the #2 surface.

Figure 6-6
Low-e, Gas-Filled Windows

Winter Performance

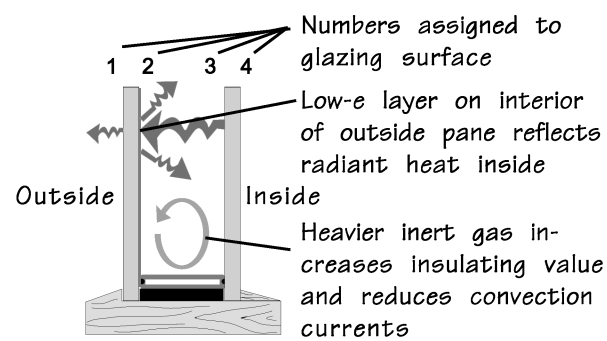

Summer Performance

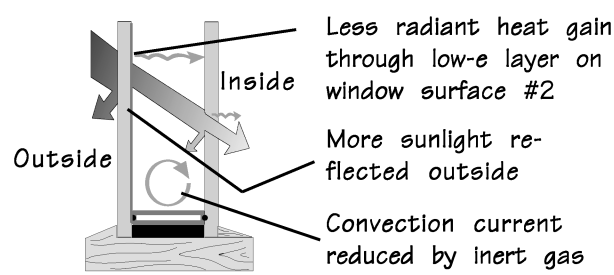

Caution about Window Insulating Values

Window insulating values are typically reported in U-values — the inverse of R-values. Double-glazed products have R-values as high as 2.0, or U-values of about 0.50 (1/R = 1/2 = 0.50). Single-glazed windows generally have R-values of 1.0 and thus have U-values of 1.0.

The National Fenestration Rating Council (NFRC) offers a voluntary testing program for window and door products. The NFRC reports an average whole window U-value and R-value. If windows used in your home are listed by the NFRC, they will include a label showing test data for your windows.

Often, window R-values are reported as the insulating value through the glass surface alone. However, windows are made of more than just glass. They have a frame or sash; spacer strips, typically made of aluminum, that hold the sections of glass in a double-glazed window apart; and a jamb. The claimed R-value should reflect the overall insulating value of all of the components. New procedures are encouraging all manufacturers to report window R-values consistently and accurately.

For example, there are two companies which produce extremely efficient windows. Both have two outer glass panes and two inner layers of low-e coated film. In one case, all air spaces are filled with argon, providing an R-value of 7.8 for the glass. However, losses through the edges and frames lower the overall window R-value to 4.0. Another window is filled with air rather than argon yielding an R-value of 6.6 for the glass. Due to its unique edge system, which has thermal breaks made of nylon spacers with insulation in between, the overall window R-value is about 6.3 — 50% greater than that for the window with higher glass R-value. Future development in windows will concentrate on both glass technology and the balance of the window — edges, seals, and frames.

Figure 6-7
NFRC Label

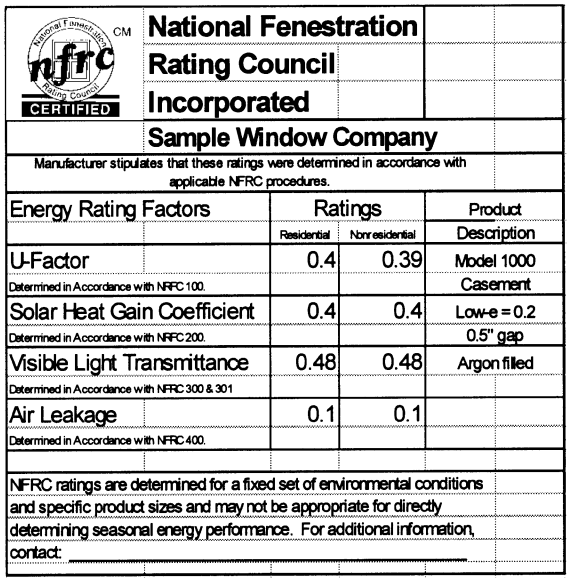

National Fenestration Rating Council Incorporated		
Sample Window Company		
Manufacturer stipulates that these ratings were determined in accordance with applicable NFRC procedures.		
Energy Rating Factors	Ratings: Residential	Ratings: Nonresidential
U-Factor (Determined in Accordance with NFRC 100.)	0.4	0.39
Solar Heat Gain Coefficient (Determined in Accordance with NFRC 200.)	0.4	0.4
Visible Light Transmittance (Determined in Accordance with NFRC 300 & 301)	0.48	0.48
Air Leakage (Determined in Accordance with NFRC 400.)	0.1	0.1
Product Description: Model 1000 Casement; Low-e = 0.2; 0.5" gap; Argon filled		
NFRC ratings are determined for a fixed set of environmental conditions and specific product sizes and may not be appropriate for directly determining seasonal energy performance. For additional information, contact:		

NFRC labels also show the following key window performance features:

- ❒ Air leakage rates
- ❒ Solar heat gain coefficient — the fraction of sunlight transmitted through the window
- ❒ Visible light transmittance — the fraction of visible light that is transmitted

Figure 6-8
Inside Window Temperatures in Cold Weather
(when 75°F inside and 20°F outside)

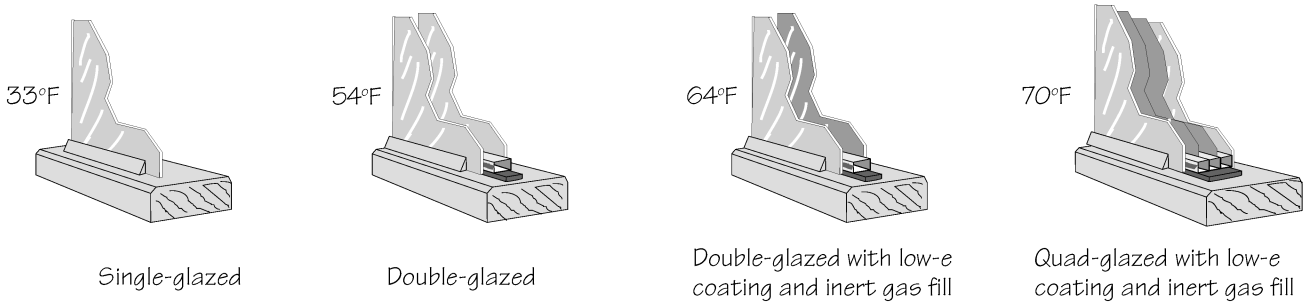

PROPER WINDOW INSTALLATION

Step 1: Make sure window fits in rough opening and that the sill is level.

Step 2: Install window level and plumb according to the manufacturer's instructions.

Step 3: Use a dry, pliable foam gasket or non-expanding foam sealant to seal between the jamb and the rough opening, or stuff the gap with backer rod or insulation and cover the insulation with caulk (remember — most insulation doesn't stop air leaks — it just serves as a filter).

Step 4: If using an interior air barrier (such as drywall) or exterior air barrier (such as housewrap), seal the barrier to the window jamb with long-life caulk or other appropriate, durable sealant.

Future Window Options

Electronic windows

A new genre of windows are composed of special materials that can darken the glazing by running electricity through the unit. Some manufacturers already have prototypes of these high technology windows in operation. At night and on sunny days, an electric switch can be turned on to render the windows virtually opaque.

Solid windows

Another new window technology uses gel-type material up to one inch thick between layers of glazing. The window offers increased insulating value, but at present is not completely transparent and is not economical in Louisiana.

Table 6-3
Economics of Energy Conserving Windows and Doors*
(compared to single-glazed windows)

Type of Treatment	Energy Savings ($/yr)	Extra Costs ($)**	Rate of Return	Extra Annual Mortgage ($/yr)
Windows				
1. Double-glazed (R-1.8)	116	660	19%	53
2. Double-glazed with low-e coating (R-2.4)	157	1,110	16%	89
3. Double-glazed with low-e coating and inert gas fill (R-2.7)	186	1,260	17%	101
4. Triple-glazed, low-e coating, inert gas fill (R-3.2)	235	1,710	15%	138
5. Quad-glazed, low-e coating, inert gas fill (R-5)	245	2,900	9%	232
Doors (compared to solid wood doors)				
1. Foam-insulated doors (R-5)	5	20	26%	2
2. Storm doors over wood doors (R-3.2)	3	90	n/a	9

* Savings and costs are for a home with 300 square feet of windows and 2 exterior doors located in Baton Rouge, LA.

**Extra annual mortgage for 30-year loan @ 7% annually would be 0.08 times the initial cost. For example, double glazed windows cost an extra $660, which would add about $53 (0.08 x $660) to the annual mortgage.

Doors

Exterior wood doors have low insulating values, typically R-2.2. Storm doors increase the R-value only to about R-3.0 and are not good energy investments. The best energy-conserving alternative is a metal or fiberglass insulated door. Metal doors have a foam insulation core which can increase the insulating value to R-5 or greater. They usually cost no more than conventional exterior doors and come in decorative styles, complete with raised panels and insulated window panes.

Insulated metal or fiberglass doors usually have excellent weatherstripping and long lifetimes. They will not warp and offer increased security; however, they are difficult to trim, so careful installation is required. Table 6-3, shown earlier, examines the costs and savings of energy conserving doors. As with windows, it is important to seal the rough openings. Thresholds should seal tightly against the bottom of the door and must be sealed underneath. After the door is installed, check it carefully when closed to see if there are any air leaks.

Accessible Design

Almost one out of ten people will suffer from physical disabilities during their lifetime. Designing homes to provide accessibility for the physically impaired adds little to the cost of a home. One important feature is to design both exterior and interior door openings and hallways 3'-0" wide to allow passage of a wheelchair or walker. Ensuring that baths and kitchens have adequate room for wheelchairs is another feature that adds little to construction costs but is expensive to retrofit.

Overall Window and Door Recommendations

- ❒ Use double-glazed windows with low-e coatings and inert gas fill. The low-e coating should be applied to the outer pane of the glass to help its performance in summer.
- ❒ South-facing windows should be clear and shaded with about a 2-foot horizontal overhang for single-story windows.

Figure 6-9
Insulated Metal Door

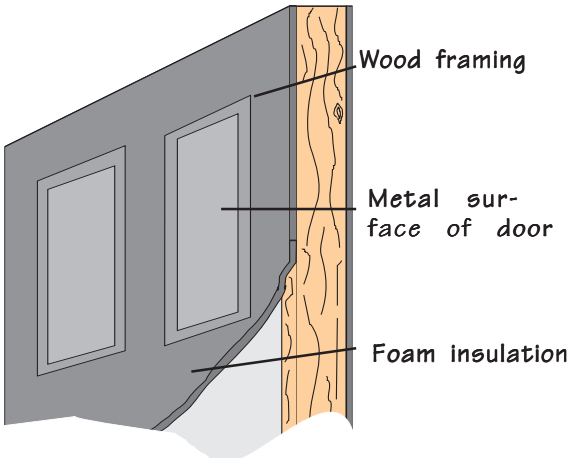

- ❒ East and west facing windows should have low Solar Heat Gain Coefficients through the use of tinting, reflective or selective coatings, or window films. West window areas, in particular, should be limited to avoid afternoon solar gain.
- ❒ North windows, while avoided in northern climates, are excellent for indirect lighting and ventilation.
- ❒ Insulated doors should be used, with the possible exception of a front accent door. Designers should consider attractive fiberglass entry doors that are now available as well.

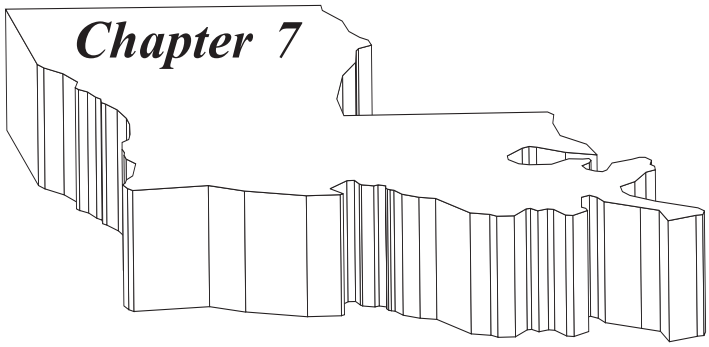

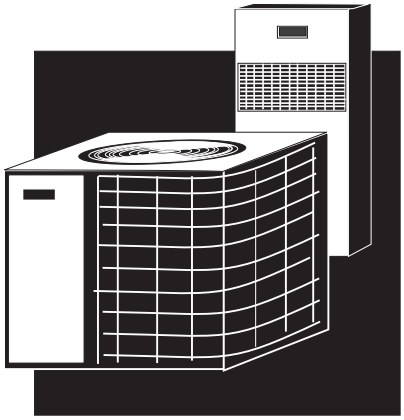

Heating, Ventilation, Air Conditioning (HVAC)

One of the most important decisions regarding a new home is the type of heating and cooling system to install. Equally critical is the heating and cooling contractor selected, as the operating efficiency of a system depends as much on proper installation as it does on the performance rating. Keys to obtaining the design efficiency of a system in the field include:

- ❒ Sizing and selecting the system for the heating, cooling, and dehumidification load of the home being built
- ❒ Correct design of the ductwork or piping
- ❒ Proper installation and charging
- ❒ Insulating and sealing all ductwork or piping

Improper installation of components, in particular of ductwork, has negative impacts on comfort and energy bills and can dramatically degrade the quality of air in a home. Poorly designed and installed ducts can create dangerous conditions that may reduce comfort, degrade indoor air quality, or even threaten the lives of the homeowners.

Types of HVAC Systems

There are two primary types of central heating systems — forced-air systems and radiant heating systems. Most new homes have *forced-air heating and cooling systems* — either using a central furnace and air conditioner or a heat pump. Figure 7-1 shows that in forced-air systems, a series of *ducts* distribute the conditioned heated or cooled air throughout the home. The conditioned air is forced through the ducts by a *blower*, located in a unit called an *air handler*.

Figure 7-1
Components of Forced-air Systems

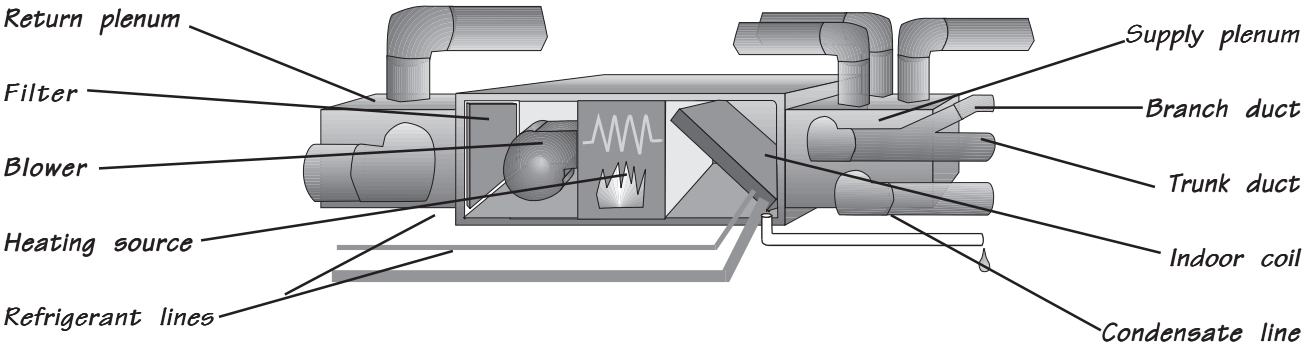

Most homes in Louisiana have two choices for central, forced-air systems: fuel-fired furnaces with electric air conditioning units or electric heat pumps. The best system for each home depends on many factors -- cost, comfort, efficiency, annual energy use, availability, and local prices for fuels and electricity.

When considering a HVAC system for a residence, remember that energy efficient homes have less demand for heating and cooling, so substantial cost savings may be obtained by installing smaller units that are properly sized to meet the load. Because energy bills in more efficient homes are lower, higher efficiency systems will not provide as much annual savings on energy bills and may not be as cost effective as in less efficient homes. A home with annual heating and cooling bills of only $700 will find it hard to justify a 20% more efficient HVAC system that costs an extra $2,000 or $3,000. The payback period will exceed 13 years.

Sizing

It is important to size heating and air conditioning systems properly. Not only does oversized equipment cost more, but it can waste energy and may decrease comfort. For example, an oversized air conditioner cools a house but may not provide adequate dehumidification, thus creating cool, but clammy air.

Do not rely on rule-of-thumb methods to size HVAC equipment. Many contractors select air conditioning systems based on a rule such as 500 square feet of cooled area per ton of air conditioning (a ton provides 12,000 Btu per hour of cooling). Instead, use a sizing procedure such as:

- ❒ Calculations in *Manual J* published by the Air Conditioning Contractors Association
- ❒ Similar procedures developed by the American Society of Heating, Refrigeration, and Air Conditioning Engineers (ASHRAE)
- ❒ Software procedures developed by electrical or gas utilities, the U.S. Department of Energy, HVAC equipment manufacturers, or private software companies

The heating and cooling load calculations rely on the size and type of construction for each component of the building envelope, as well as the heat given off by the lights, people, and equipment inside the house. If a zoned heating and cooling system is used, the loads in each zone should be calculated separately.

Table 7-1
Equipment Sizing and Cost Comparison

Type of House	More Efficient	Less Efficient
R-Values and Areas		
Attic [Area/R-value]	2,000 sq ft R-38	2,000 sq ft R-25
Wall [Area/ R-value]	1,600 sq ft/ R-21	1,600 sq ft/ R-16
Window [Area/ R-value]	250/R-3	400/R-2
Floors [Area/ R-value]	2,000/ R-19	2,000/ None
Air Leakage (nach)*	0.35	0.60
Duct Leakage (CFM25)**	50	250
HVAC System Sizing:		
Heating(Btu/hour)	24,600	55,400
Cooling(Btu/hour)	21,200	39,900
Estimated tons of cooling***	2	3.5
Square feet/ton	1,000	570
Typical Equipment Cost:		
Lower Effic. (SEER 10-11)	$3,300	$4,950
Higher Effic. (SEER 11-12)	$4,100	$5,500

* nach means the number of natural air changes per hour the home has due to air leakage.

** CFM25 is the duct leakage rate at a pressure of 25 Pascals — a standard number used during a duct leakage test.

*** there are 12,000 Btu/hour in a ton of cooling.

Table 7-1 compares the size of heating and cooling systems for two homes with identical floor areas. The more efficient home reduces the heating load 55% and the cooling load 43%. Thus, the additional cost of the energy features in the more efficient home is offset by the $600 to $650 savings from reducing the size of the HVAC equipment.

Oversimplified rules of thumb provide oversized heating and cooling systems for more efficient homes. Oversized units cost more to install, increase energy bills, suffer greater wear and tear, and often may not provide adequate dehumidification.

It takes about 15 minutes for most air conditioners to reach peak efficiency. During extreme outside temperatures (under 32° in winter and over 88° in summer) the system should run about 80% of the time. Oversized systems cool the home quickly and often do not operate long enough to reach peak efficiency.

Proper sizing includes designing the cooling system to provide adequate dehumidification. In Louisiana's

MANUAL J EXAMPLE*

Manual J, Load Calculation for Residential Winter and Summer Air Conditioning, is published by the Air Conditioning Contractors of America (ACCA.) The procedures in the manual calculate the building heating and cooling loads as follows:

1. Determine all dimensions of the exterior building envelope for each type of surface (wall, floor, window, door, ceiling, etc.).

2. Find R-values of all components.

3. Find the Construction Number of each component based on tables in the book.

4. Look up climatic data in the manual for the locality in which the home is being constructed.

5. Based on the Construction Number and the climatic data, find the Heat Transfer Multiplier (HTM) for the different components during the heating (Htg.) and cooling (Clg.) seasons.

6. Fill in the tables for the heating and cooling load.

7. Calculate the infiltration loads, internal gains, and latent loads in separate charts.

8. Find the grand total loads in Btu/hour.

9. Use ***Manual S, Residential Equipment Selection***, also published by ACCA, to help select the equipment for the home.

1	Name of Room		Entire House
2	Running Ft. Exposed Wall		94.5
3	Room Dimensions Ft.	32	62.5
4	Ceiling Ht. Ft.		8

	TYPE OF EXPOSURE		Const. No.	HTM Htg.	HTM Clg.	Area/ Length	Btuh Htg.	Btuh Clg.
5	Gross Exposed Walls & Partitions	a b c d	12F					
6	Windows & Glass Doors Htg.	a b c d	3b	30.5		300	9,150	
7	Windows & Glass Doors Clg.	North E&W South			16 46 25	75 150 75		1,200 6,900 1,875
8	Other Doors		10D	23	10.9	42	966	458
9	Net Exposed Walls & Partitions	a b c d	12F	3.5	1.7	1,170	4,095	1,989
10	Ceilings	a b	16G	1.6	1.2	2,000	3,200	2,400
11	Floors	a b	19D	1.3	0	2,000	2,600	0
12	Infiltration HTM						11,757	5,878
13	Sub Total Btuh Loss = 6+8+9+10+11+12						31,768	20,700
14	Duct Btuh Loss			0.1			3,177	2,070
15	**Total Btuh Loss = 13 + 14**						**34,945**	
16	People @ 300 & Appliances= 1200							2,400
17	Sensible Btuh Gain = 7+8+9+10+11+12+16							25,170
18	Duct Btuh Gain				0.05		1,747	1,258
19	**Total Sensible Gain**						**36,692**	**26,428**
	Latent Gain Calculations							
	Latent Infiltration							2,471
	Latent Ventilation							0
	Latent Internal Gains							1,920
	Total Latent Gain							**4,391**

* A *Manual J* calculation takes approximately 30 to 60 minutes for an average home. The measurements for the calculations are available from the construction drawings. *Manual S* calculations require an additional 15 to 30 minutes.

humid climate it is critical to calculate the *latent load* — the amount of dehumidification needed for the home. If the latent load is ignored, the home may become uncomfortable due to excess humidity.

The Sensible Heating Fraction (SHF) designates the portion of the cooling load for reducing indoor temperatures (*sensible cooling*). For example, in a HVAC unit with a 0.75 SHF, 75% of the energy expended by the unit goes to cool down the temperature of indoor air. The remaining 25% goes for latent heat removal — taking moisture out of the air in the home. The Manual J system sizing procedure includes calculations to estimate latent load.

Many homes in Louisiana have design SHFs of approximately 0.7 — 70% of the cooling will be sensible and 30% latent. Systems that deliver less than 30% latent cooling may fail to provide adequate dehumidification in summer.

Temperature Controls

The most basic type of control system is a heating and cooling thermostat. *Programmable thermostats,* also called setback thermostats, can be big energy savers for homes by automatically adjusting the temperature setting when people are sleeping or are not at home. Be certain that the programmable thermostat selected is designed for the particular heating and cooling equipment it will be controlling. This is especially important for heat pumps, as an improper programmable thermostat can actually increase energy bills.

COOLING EQUIPMENT SELECTION

Table 7-2 and 7-3 show equipment charts for two sample air conditioning units. Each system provides a wide range of outputs, depending on the blower speed and the temperature conditions. The SHF in the chart is the Sensible Heating Fraction — the fraction of the total output that cools down the air temperature. The remainder of the output dehumidifies the air — provides latent cooling. Note that both systems provide about 36,000 Btu/ hour of cooling.

System A: with 80° return air, SEER = 12.15
At low fan speed, provides 35,800 Btu/hour, 0.71 SHF, and thus 29% latent cooling (dehumidification).
At high fan speed, provides 38,800 Btu/hour, but a 0.81 SHF, and only 19% latent cooling — not enough dehumidification in many Louisiana homes.

System B: with 80° return air/ SEER = 11.55
At low fan speed, provides 32,000 Btu/ hour, 0.67 SHF and 33% dehumidification.
At high fan speed, provides 35,600 Btu/hour, 0.76 SHF and 24% dehumidification.

Thus, System A, while nominally more efficient than B, provides less dehumidification and potentially less comfort. Varying fan speed can damage equipment and drastically lower efficiency if done by an untrained person without the proper knowledge and equipment to monitor refrigerant pressures.

Table 7-2
Sample Cooling System A Data

Total Air Volume (cfm)	Total Cooling Capacity (Btuh)	Sensible Heating Fraction (SHF) Dry Bulb Temp. 75°F	80°F	85°F
950	35,800	0.58	0.71	0.84
1,200	37,500	0.61	0.76	0.91
1,450	38,800	0.64	0.81	0.96

Table 7-3
Sample Cooling System B Data

Total Air Volume (cfm)	Total Cooling Capacity (Btuh)	Sensible Heating Fraction (SHF) Dry Bulb Temp. 75°F	80°F	85°F
950	32,000	0.56	0.67	0.78
1,200	34,100	0.58	0.71	0.84
1,450	35,600	0.61	0.76	0.90

Table 7-4
Typical Savings from Programmable Thermostats

Winter Heating Setting	Energy Savings ($/yr)
72˚F Day/72˚F Night	0
72˚F Day/65˚F Night	28
68˚F Day/68˚F Night	48
68˚F Day/60˚F Night	74
68˚F Day/55˚F Night	77

A thermostat should be located centrally within the house or zone. It should not receive direct sunlight or be near a heat-producing appliance. A good location is often 4 to 5 feet above the floor in an interior hallway near a return grille.

The interior wall on which the thermostat is installed, like all walls, should be well sealed at the top and bottom to prevent circulation of cool air in winter or hot air in summer. Some homeowners have experienced excessive energy bills and discomfort for years because air from the attic leaked into the wall cavity behind the thermostat and caused the cooling or heating system to run much longer than needed.

Zoned HVAC Systems

Larger homes often use two or more separate heating and air conditioning units for different floors or areas. Multiple systems can maintain greater comfort throughout the house while saving energy by allowing different *zones* of the house to be at different temperatures. The greatest savings come when a unit serving an unoccupied zone can be turned off.

Rather than install two separate systems, HVAC contractors can provide automatic zoning systems that operate with one system. The ductwork in these systems typically has a series of thermostatically controlled dampers that regulate the flow of air to each zone. Although somewhat new in residential construction, thermostats, dampers, and controls for zoning large central systems have been used for years in commercial buildings.

If your heating and air conditioning subcontractor feels that installing two or three separate HVAC units is necessary, have them also estimate the cost of a single system with damper control over the ductwork. Such a system must be carefully designed to ensure that the blower is not damaged if dampers are closed to several supply ducts. In this situation, the blower still tries to deliver the same air flow as before, but now through only a few ducts. Back pressure created against the blades of the blower may cause damage to the motor. There are three primary design options:

1. Create two zones and oversize the ductwork so that when the damper to one zone is closed, the blower will not suffer damage.
2. Install a manufactured system that uses a dampered bypass duct connecting the supply plenum to the return ductwork. The control system always allows the same approximate volume of air to circulate.
3. Use a variable speed HVAC system. Because variable speed systems are usually more efficient than single-speed systems, they will further increase savings.

Figure 7-2
Automatic Zoned System

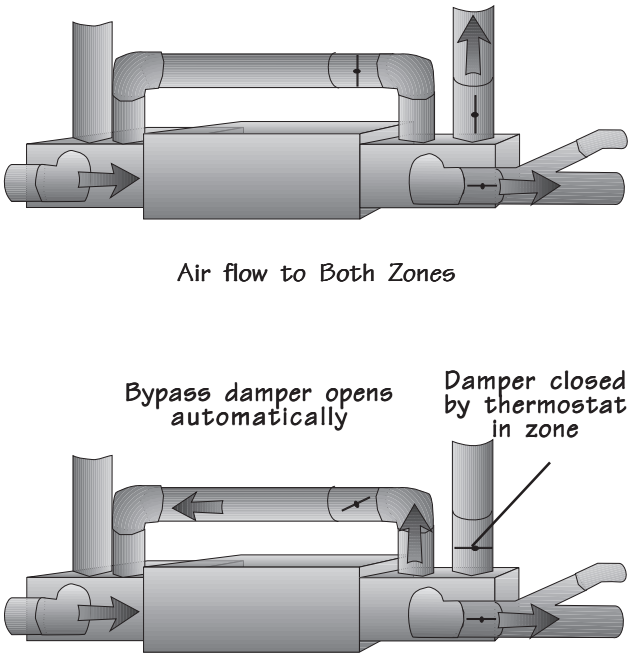

Air Conditioning Equipment

Air conditioners and heat pumps work similarly to provide cooling and dehumidification. In the summer, they extract heat from inside the home and transfer it outside. In winter, a heat pump reverses this process and extracts heat from outside and transfers it inside.

Both systems typically use a vapor compression cycle, which is described in a sidebar on the next page. This cycle circulates a *refrigerant* — a material that increases in temperature significantly when compressed and cools rapidly when expanded. The exterior portion of a typical air conditioner is called the *condensing unit* and houses the *compressor*, the noisy part that uses most of the energy, and the *condensing coil*.

The exterior, air-cooled condensing unit should be kept free from plants and debris that might block the flow of air through the coil or damage the thin fins of the coil. Ideally, locate the condensing unit in the shade. However, do not block air flow to this unit with dense vegetation, fencing or overhead decking.

The inside mechanical equipment, called the *air-handling unit*, houses the *evaporator coil*, the indoor blower, and the *expansion* or *throttling valve*. The controls and ductwork for circulating cooled air to the house complete the system.

The SEER Rating

The cooling efficiency of a heat pump or an air conditioner is rated by the *Seasonal Energy Efficiency Ratio (SEER)*, a ratio of the average amount of cooling provided during the cooling season to the amount of electricity used. Current national legislation mandates a minimum SEER 10.0 for most residential air conditioners. Pending federal policies may further increase minimum efficiencies. Some units can exceed SEER 15.0. Packaged units, which combine the outdoor and indoor components into one package located outside, have a minimum SEER of 9.7.

Builders should be aware that the SEER rating is a national average based on equipment performance in Virginia. Some equipment may not produce the listed SEER in actual operation in Louisiana's homes, particularly during the cooling season.

One of the main problems with HVAC systems has been the inability of some higher efficiency equipment to dehumidify homes adequately. If units are not providing sufficient dehumidification, the typical homeowner response is to lower the thermostat setting. Since every degree the thermostat is lowered increases cooling bills 3 to 7%, systems that have nominally high efficiencies, but inadequate dehumidification, may suffer from higher than expected cooling bills.

In fact, poorly functioning "high" efficiency systems may actually cost more to operate than a well designed, moderate efficiency unit. Make certain that the contractor has used *Manual J* techniques to size the system so that the air conditioning system meets both sensible and latent (humidity) loads at the manufacturer's claimed efficiency.

Variable Speed Units

The minimum standard for air conditioners of SEER 10.0 provides for a reasonably efficient unit. However, higher efficiency air conditioners may be quite economical. Table 7-4 examines the economics of different options for a sample home.

In order to increase the overall operating efficiency of an air conditioner or heat pump, multispeed and variable speed compressors have been developed. These units can operate at low or medium speeds when the outdoor temperatures are not extreme. They can achieve a SEER of 15 to 16.

The cost of variable speed units is generally about 30% higher than standard units. Advantages they offer over standard, single-speed blowers:

- They usually save energy.
- They are quieter, and because they operate fairly continuously, there is far less start-up noise (often the most noticeable sound in a standard unit).
- They dehumidify better; some units offer a special dehumidification cycle, which is triggered by a humidistat that senses when the humidity levels in the home are too high.

Proper Installation

Too often, high efficiency cooling and heating equipment is improperly installed, which can cause it to operate at substantially reduced efficiencies. A SEER

AIR CONDITIONERS AND HEAT PUMPS

Air Conditioners use the vapor compression cycle, a 4-step process:

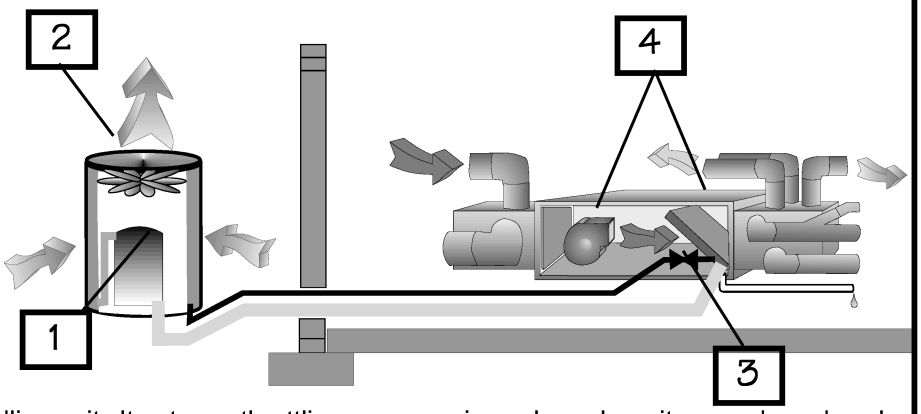

1. The compressor (in the outside unit) pressurizes a gaseous refrigerant. The refrigerant heats up during this process.

2. Fans in the outdoor unit blow air across the heated, pressurized gas in the condensing coil; the refrigerant gas cools and condenses into a liquid.

3. The pressurized liquid is piped inside to the air-handling unit. It enters a throttling or expansion valve, where it expands and cools.

4. The cold liquid circulates through evaporator coils. Inside air is blown across the coils and cooled while the refrigerant warms and evaporates. The cooled air is blown through the ductwork. The refrigerant, now a gas, returns to the outdoor unit where the process starts over.

Air Source Heat Pumps use a reversed version of the same cycle for heating. A reversing valve allows the heat pump to work automatically in either heating or cooling mode. The steps for heating are:

1. The compressor (in the outside unit) pressurizes the refrigerant, which is piped inside.

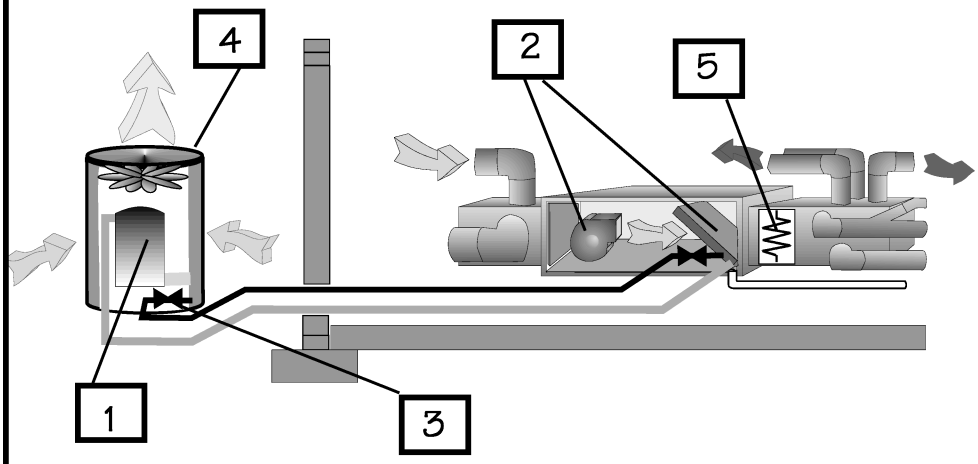

2. The hot gas enters the inside condensing coil. Room air passes over the coil and is heated. The refrigerant cools and condenses.

3. The refrigerant, now a pressurized liquid, flows outside to a throttling valve where it expands to become a cool, low pressure liquid.

4. The outdoor evaporator coil, which serves as the condenser in the cooling process, uses outside air to boil the cold, liquid refrigerant into a gas. This step completes the cycle.

5. If the outdoor air is so cold that the heat pump cannot adequately heat the home, supplemental heating must be provided by some other heater. In Louisiana, this is usually a gas fired heater or an electric resistance strip heater.

6. Periodically in winter, the heat pump must switch to a "defrost cycle," which melts any ice that has formed on the outdoor coil.

Packaged systems and room units use the same process in a single box.

Table 7-5
Air Conditioner Economics*
(compared to SEER 10)

Equipment Efficiency	Incremental Energy Savings ($/yr)	Incremental Installed Costs ($)	Annual Rate of Return	Extra Annual Mortgage ($/yr)
SEER 11 (3-ton system)	30	100	31%	8
SEER 12 (3-ton system)	54	200	29%	16
SEER 14 (3-ton system)	92	800	13%	64
SEER 15 (3-ton system)	108	1000	12%	80
SEER 11 (5-ton system)	49	150	35%	12
SEER 12 (5-ton system)	89	250	38%	20
SEER 14 (5-ton system)	153	900	19%	72
SEER 15 (5-ton system)	181	1200	17%	96

* For a system in Baton Rouge. The table assumes energy prices escalate 2% per year.

** Extra annual mortgage for 30-year loan @ 7% annually would be 0.08 times the initial cost.

12 air conditioning system that is installed poorly with leaky ductwork may only deliver a SEER 7. Typical installation problems are:

- *Improper charging of the system* — the refrigerant of the cooling system is the work horse — it flows back and forth between the inside coil and the outside coil, changing states and undergoing compression and expansion. The HVAC contractor should use the manufacturer's installation procedures to charge the system properly. The correct charge cannot be ensured by pressure gauge measurements alone. In new construction, the refrigerant should be weighed in based on the length and size of the refrigerant lines and the HVAC system. Then, use either the supercharge temperature method or, for systems with certain types of expansion valves, the subcooling method to confirm that the charge is correct.
- *Reduced air flow* — if the system has poorly designed ductwork, constrictions in the air distribution system, clogged or more restrictive filters, or other impediments, the blower may not be able to transport adequate air over the indoor coils of the cooling system. Reduced air flow of 20% can drop the operating efficiency of the unit by about 1.7 SEER points; thus, a unit with a SEER of 10.0 would only operate at SEER 8.3.
- *Inadequate air flow to the outdoor unit* — if the outdoor unit is located under an overhang or a deck, or within an enclosure such as fencing or bushes, air may not circulate freely between the unit and outdoor air. In such cases, the temperature of the air around the unit rises, thereby making it more difficult for the unit to cool the refrigerant for the air conditioner. The efficiency of a unit surrounded by outdoor air that is 10 degrees warmer than the ambient outside temperature can drop by over 10%.

For all types of HVAC systems, the best way to ensure proper installation is to include a set of specifications with the plans that dictate the following:

- The system shall be sized for the load using Manual J or other approved methods.
- The refrigerant charge shall be calculated, weighed in, and confirmed using manufacturer's procedures.

- ❒ Ductwork shall be sized using Manual D or other approved method and fully sealed.
- ❒ Make certain supply air has a pathway back to the return. Many home rely on undercut interior doors to let air flow from the room to a central return. However, as discussed in Chapter 8, many rooms, especially those with multiple supply ducts, become pressurized when the HVAC operates. As a consequence, when several interior doors are closed, the main section of the home where the central return is located becomes negatively pressurized. Rooms with more than one supply duct and no return should be connected to the central section of the home with a transfer grille, which permits air flow between the two spaces.
- ❒ The system's operation shall be checked, balanced, and confirmed.

Figure 7–3
Types of Heat Pumps

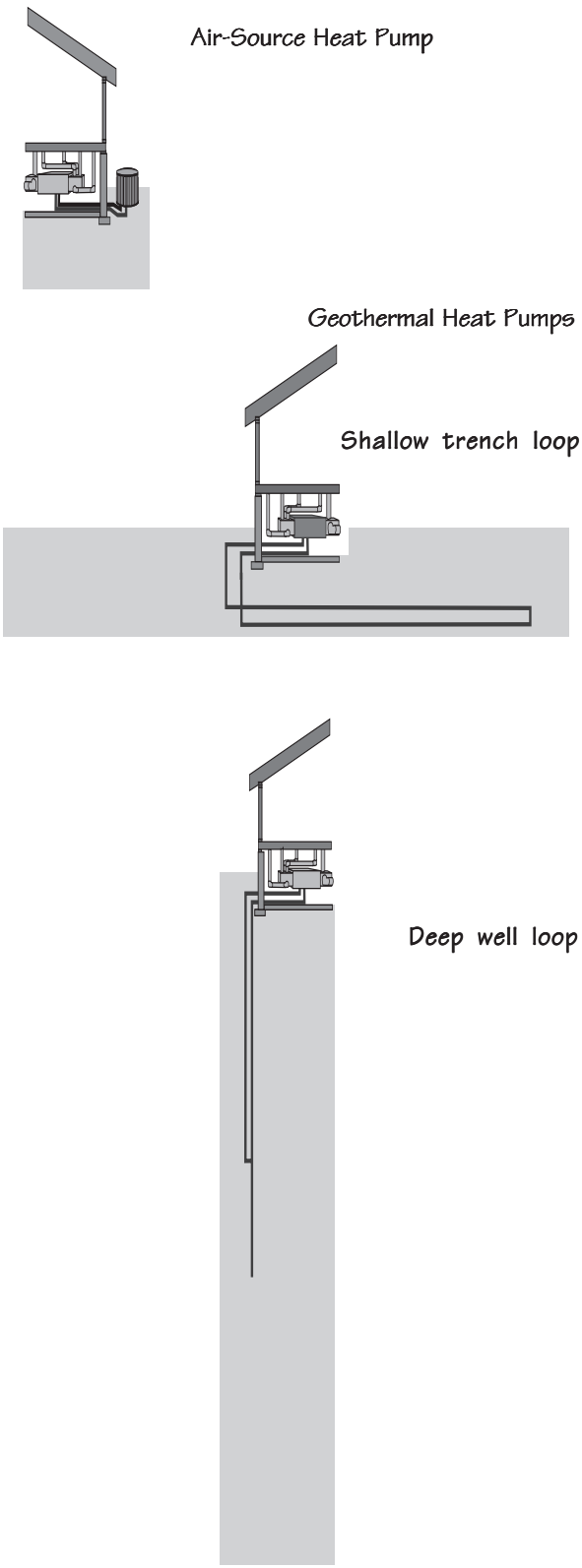

HEATING SYSTEMS

Two types of heating systems are most common in new homes — *furnaces*, which burn natural gas, propane, fuel oil, or electricity and *electric heat pumps*. Furnaces are generally installed with central air conditioners. Heat pumps provide both heating and cooling. Some heating systems are integrated with water heating systems.

HEAT PUMP EQUIPMENT

Air-source heat pumps

The most common type of heat pump is the *air-source heat pump*, which serves as an air conditioner during the cooling season. In winter, it reverses the cycle and obtains heat from cool outside air. Most heat pumps operate at least twice as efficiently as conventional electric resistance heating systems. They have rated lifetimes of 15 years, compared to 20 years for most furnaces; however, many homeowners have well maintained equipment over 20 years old that continues to work effectively.

At outside temperatures of 25 to 35°F, at a temperature known as the *balance poin*t, heat pumps can no longer meet the entire heating load of the home. Most systems use electric resistance coils called *strip*

heaters to provide supplemental backup heat. Strip heaters, located in the air handling unit, are much more expensive to operate than the heat pump itself. They should not be oversized, as they can drive up the peak load requirements of the local electric utility.

A staged, heat pump thermostat used in concert with multistage strip heaters will minimize strip heat operation. *Dual-fuel* or *piggyback* systems heat the home with natural gas or propane when temperatures drop below the balance point.

Air-source heat pumps should have outdoor thermostats, which prevent operation of the strip heaters at temperatures above 38 °F. The International Energy Conservation Code requires controls to prevent strip heater operation during weather when the heat pump alone can provide adequate heating. In addition, tight ductwork is especially important in air-source heat pumps to prevent an uncomfortably low delivery temperature of supply air into the living areas.

Geothermal heat pumps

Unlike an air-source heat pump with its outside coil and fan, a geothermal heat pump relies on fluid-filled pipes buried beneath the earth as a source of heating in winter and cooling in summer. In each season, the temperature of the earth is closer to the desired temperature of the home than outdoor air, so less energy is needed to maintain comfort. Eliminating the outside equipment means higher efficiency, less maintenance, greater equipment life, no noise, and no inconvenience of having to mow around that outdoor unit.

Geothermal heat pumps have SEER ratings above 15 and can save up to 40% on the heating and cooling costs for a standard air-source heat pump. Some geothermal products have greater dehumidification ability as well. Many units can also provide hot water at much greater efficiency than standard electric water heaters. Because of the warmer temperatures of the earth, geothermal heat pumps deliver heated air in winter to the home between 95 to 110°F.

Types of closed loop designs for piping include:

- ❒ In deep well systems, a piping loop extends several hundred feet under ground.
- ❒ Shallow loops are placed in long trenches, typically about 6-feet deep and several hundred feet long; coiling the piping into a "slinky" reduces the length requirements but a relatively large ground area is required.
- ❒ For homes located on private lakes, loops can be installed on the bottom, which decreases the installation costs.

The buried piping in geothermal systems usually has a 25-year warranty. Most experts believe the piping will last longer, because it is made of a durable plastic with heat-sealed connections, and the circulating fluid has an anticorrosive additive.

Geothermal heat pumps cost $800 to $1,400 more per ton to install than air-source units. The actual cost varies according to the difficulty of installing the ground loops as well as the size and features of the equipment.

Table 7- 6
Economic Analysis of Heat Pumps*
(compared to HSPF 6.8/ SEER 10)

Equipment Type and Efficiency	Incremental Energy Savings ($/yr)	Incremental Installed Costs ($)	Annual Rate of Return	Incremental Mortgage Costs**
SEER 11 (3 tons) / HSPF 7.2	49	200	26.5%	16
SEER 12 (3 tons) / HSPF 7.5	86	400	23.5%	32
SEER 14 (3 tons) / HSPF 7.2	145	750	21.2%	145
3-ton Geothermal System (with water heating)	367	3,600	11.5%	287
SEER 11 (5 tons) / HSPF 7.2	82	300	29.2%	24
SEER 12 (5 tons) / HSPF 7.5	144	650	24.1%	52
SEER 14 (5 tons) / HSPF 7.2	241	1,000	26.0%	80
5-ton Geothermal System (with water heating)	611	6,000	11.5%	479

*For a system in Baton Rouge. Table assumes energy prices escalate 2% per year.
**Extra annual mortgage for 30-year loan @ 7% annually would be 0.08 times the initial cost.

Because of their high installation cost, geothermal heat pumps may not be economical for homes with low heating and cooling needs. However, their lower operating costs, reduced maintenance requirements, and greater comfort may make them attractive to many homeowners. Proper installation of the geothermal loops is essential for high performance and the longevity of the system, so choose only qualified, experienced geothermal heat pump contractors.

Measures of efficiency for heat pumps

The heating efficiency of a heat pump is measured by its *Heating Season Performance Factor* (HSPF), which is the ratio of heat provided in Btu per hour to watts of electricity used. This factor considers the losses when the equipment starts up and stops, as well as the energy lost during the defrost cycle. The HSPF averages the performance of heating equipment for a typical winter in the United States, so the actual efficiency will vary in different climates.

Typical values for the HSPF are 6.8 for standard efficiency, 7.2 for medium efficiency, and 8.0 for high efficiency. Variable speed heat pumps have HSPF ratings as high as 9.0. Geothermal heat pumps are not rated by HSPF as yet; however, they are much more efficient than air heat pumps and work well at sub-zero temperatures. They are also quieter than conventional systems and include water heating capabilities. The ARI Directory of Air Conditioning Equipment lists the efficiencies of many different products.

Furnace Equipment

Furnaces burn fuels such as natural gas, propane, and fuel oil to produce heat and provide warm, comfortable indoor air during cold weather in winter. They come in a variety of efficiencies. The comparative economics between heat pumps and furnaces depend on the type of fuel burned, its price, the home's design, and the outdoor climate. Recent increases in energy prices have improved the economics of more efficient heating and cooling systems. However, at this point in time it is difficult to compare furnaces and heat pumps of various types due to long-term fuel price uncertainty.

Furnace operation

Fuel-fired furnaces require oxygen for combustion and extra air to vent exhaust gases. For many years, atmospheric or natural draft furnaces were the standard. These units draw in air from around them whether located in the house, crawlspace or attic. They have a single, unsealed exhaust stack to carry the hot exhaust gases out of the home. Older units used a continuously burning gas flame as a pilot light to ignite the fuel when the home's thermostat detected a need for heat.

Homes today are generally built much tighter, have central air conditioning, and a variety of exhaust fans including range hoods, bathroom exhaust fan, and clothes dryers. As discussed in Chapter 3 (see page 44) and in Chapter 8 on ductwork, operating exhaust fans and even closing interior doors can cause negative pressure in the area around the furnace, especially in tighter homes. If the negative pressure is sufficiently high, the furnace may backdraft, pulling the exhaust gases down the flue and into the home and creating potentially deadly levels of carbon monoxide.

Because negative pressures can occur in virtually any home, atmospheric furnaces should not be installed in the conditioned space. If located inside the conditioned area of a home, they must be installed in a sealed and insulated closet, as shown in Figure 7-4, with two sources of incoming combustion air--one entering near the floor and the other near the ceiling. The unit must include an exhaust vent that extends through the roof.

Figure 7-4
Sealed Mechanical Room Design for Non-direct Vent Furnace

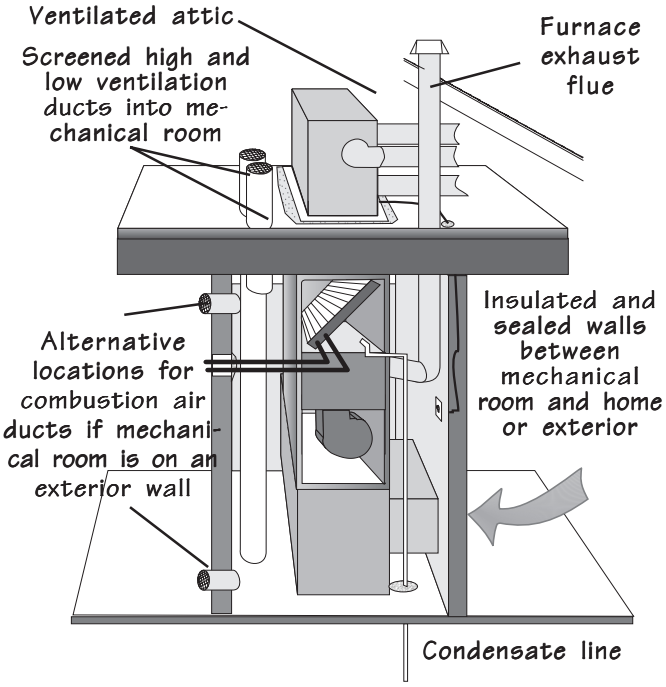

More modern furnaces, known as direct vent or uncoupled furnaces, have a duct that supplies combustion air from the outside directly to the burner and a sealed exhaust vent to the outside. Because their combustion system is totally isolated from the living space, these units can operate safely inside a home, when in proper working order. They are recommended unless the furnace is completely outside the conditioned area of the home.

Measures of efficiency for furnaces

The efficiency of a gas furnace is measured by the Annual Fuel Utilization Efficiency (AFUE), a rating which takes into consideration losses from pilot lights, start-up, and stopping. Unlike SEER and HSPF ratings, the AFUE does not consider the unit's electricity use for fans and blowers, which may exceed $50 annually.

An AFUE rating of 78% means that for every $1.00 worth of fuel used by the unit, $0.78 worth of usable heat is produced. The remaining $0.22 worth of energy is lost as waste heat exhausted up the flue.

Several years ago, the federal government mandates that furnaces have AFUE ratings of at least 78%. Old, atmospheric furnaces with pilot lights had AFUE ratings of only 50 to 60%. Manufacturers were able to meet the new standard by first replacing pilot lights with electronic ignition. Some of these units are able to operate at an AFUE of 78% and are being sold today in Louisiana.

Most manufacturers took the next steps of improving the heat exchanger inside the unit and installing a fan to force exhaust gases out of the flue. These furnaces are usually *non-direct vent* units because they do not have a sealed source of combustion air. They must be treated in the same manner as atmospheric furnaces, as described in the previous section. However, they are much less susceptible to backdrafting because of the fan for exhausting flue gases. Their AFUE ratings are typically 80% to 83%.

Models with efficiencies over 90% and up to 97%, commonly called *condensing furnaces*, contain secondary heat exchangers that actually cool flue gases until they partially condense. Heat losses up the flue are virtually eliminated. A drain line connected to the flue drains the condensate. One advantage of cooler exhaust gas is that you can use a plastic flue pipe that can be vented horizontally through a side wall. Metal flues, sometimes required by code, will quickly corrode when used with these high efficiency units. Make sure your local building official is aware of the need to install a plastic flue before ordering a condensing furnace.

There are a variety of condensing furnaces available. Some rely primarily on the secondary heat exchanger to increase efficiency, while others, such as the *pulse furnace,* have revamped the entire combustion process.

Because of the wide variety of condensing furnaces on the market, compare prices, warranties, and service. Also, compare the economics carefully with those of moderate efficiency units. Condensing units may have longer paybacks than expected in energy efficient homes due to reduced heating loads.

Table 7-7
Economic Analysis of Gas Furnaces*
(compared to AFUE .78)

Type of Treatment	Incremental Energy Savings ($/yr)	Incremental Installed Costs ($)	Annual Rate of Return	Incremental Mortgage Costs ($/yr) **
AFUE .80 (36,000 Btuh)	10	100	8%	9
AFUE .95 (36,000 Btuh)	47	650	n/a	52
AFUE .80 (60,000 Btuh)	15	125	13%	10
AFUE .95 (60,000 Btuh)	78	750	12%	60
AFUE .95 (60,000 Btuh — Shreveport)	105	750	16%	60

*For a system in Baton Rouge. Table assumes energy prices escalate 2% per year.
**Extra annual mortgage for 30-year loan @ 7% annually would be 0.08 times the initial cost.

Table 7-7 evaluates the economics of various gas furnaces for the Baton Rouge climate. The savings from more efficient heating systems are marginal due to the mild winters. Note that in Shreveport, as shown by the last example in the table, the economics improve because of the longer, colder heating season.

Gas-fired integrated systems

One type of integrated space and water heater system uses a quick recovery, high efficiency gas water heater to provide 140°F water that provides space heating and hot water. Heating needs are met by pumping hot water from the water heater to a heating coil in the air handling unit.

Integrated Space and Water Heating

An integrated space heating and domestic water heating unit provides a single, multipurpose system. The American Society of Heating, Refrigeration, and Air Conditioning Engineers (ASHRAE) has developed standards by which to evaluate such systems, as well as methods of measuring the efficiency of integrated systemswith either space heating or water heating as their primary purpose.

Figure 7-5
Integrated Space and Water Heating System

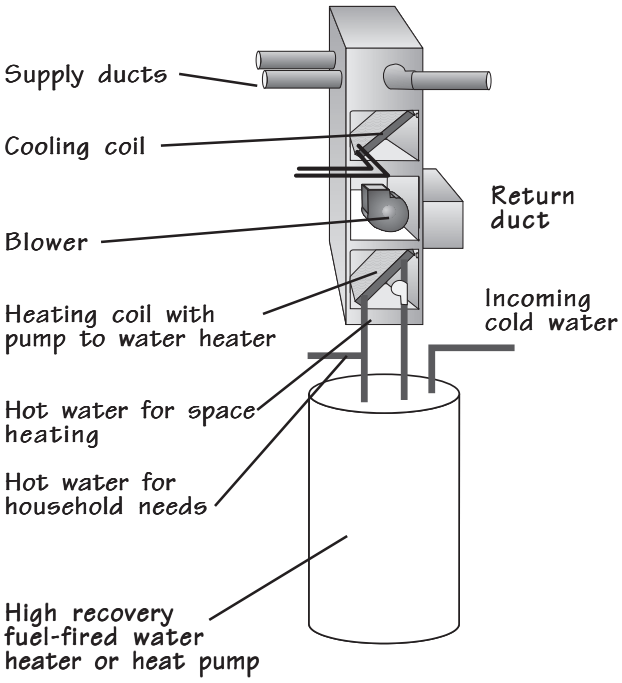

Household air passing through ductwork connected to this coil is heated to between 110 and 120°F. The water, cooled to about 120°F by the air, returns from the heating coil to the integrated water heater for reheating. The air handler can also incorporate a cooling coil for air conditioning. The economics of these units can be quite favorable; however, it is often difficult to obtain an objective comparison between integrated systems and more conventional space and water heating equipment.

Some advantages of integrated systems are:

- ❒ They can save floor space, as some air handling units mount to the wall or within the wall cavity above the water heater tank.
- ❒ They may have lower installed costs — only one gas hookup and a single flue are required.
- ❒ They often have a more efficient water heater than standard homes.

Another integrated approach uses a central boiler to provide space and water heating. Typically, the boiler can provide hot water even in nonheating seasons more efficiently than standard water heaters. However, the greater initial cost of this type of system may limit its use to families with high hot water demands.

Electric integrated systems

There are several products that use central heat pumps for water heating, space heating and air conditioning. These integrated units are available in both air-source and geothermal models.

Make sure the unit is not substantially more expensive than a separate energy efficient heat pump and electric water heater . Units within $1,500 may provide favorable economic returns. The SEER of the unit should exceed 10.0.

To be a viable choice, any type of integrated system should:

- ❒ Have a proven track record in the field.
- ❒ Cost about the same, if not less, than comparable heating and hot water systems of ap-

proximately the same efficiencies.

- ❒ Provide at least a five-year warranty.
- ❒ Be properly sized for both the heating and hot water load.

Wood Heating

Wood can be a thrifty alternative to conventional heating sources. However, if the homeowner must purchase wood fuel, the savings will diminish. Wood heating also requires work, and a fire-safe installation is essential.

Although there are wood-burning furnaces designed for homes, most homeowners interested in wood heating use a fireplace or wood heater — either freestanding stove or fireplace insert. Fireplaces and wood heaters are primarily space heaters. They radiate heat to people and objects close by and, to a lesser degree, heat the surrounding air.

Like other fuel-burning equipment, fireplaces and wood heaters need air for combustion and must vent exhaust products to the outside. In standard construction, air infiltration provides the necessary combustion air. However, in energy efficient homes, the sources of air infiltration are greatly reduced so special measures to supply outside combustion air must be provided.

An energy efficient fireplace must have a direct vent that brings air from outside the home to the firebox. The vent should be designed so that it remains clear of ashes, wood, and other materials when a fire is burning. It should be located toward the front of the firebox and have a damper or lid that prevents infiltration when the fireplace is not in use.

In addition to an outside source of combustion air, a fireplace should have a tight-fitting flue damper and glass doors to reduce air leakage further. The flue damper should be opened before lighting a fire and closed after combustion is complete.

Some fireplace designs provide a means of heating room air by circulating it around the firebox where it is heated and then passed back into the house. These systems are more efficient than standard fireplaces.

Homeowners serious about using wood as a heat source should choose a high efficiency wood heater, such as an airtight wood stove. As with fireplaces, wood heaters in energy efficient homes should have an outside source of combustion air. In fact, even standard houses may not have adequate infiltration levels to maintain proper combustion and venting for a wood heater.

To ensure safety, select a wood heater designed to use outside combustion air. These units are required by code in manufactured housing and are usually sold by businesses supplying wood heaters and fireplaces. The wood heater should also be properly sized for the home. Many energy efficient homes have small heating loads,

Table 7-8
Typical Wood Heating Savings ($/year)*

Size of Home (sq ft)	Backup Heating Efficiency	% of Heating Needs Supplied 25%	50%	75%	100%
1,200	Moderate **	56	112	167	223
	High	48	97	145	193
1,800	Moderate	80	160	240	320
	High	69	139	208	277
2,400	Moderate	105	209	314	418
	High	91	181	272	362
3,200	Moderate	137	274	411	548
	High	119	237	356	475

* Wood is assumed to cost the consumer $3 per million Btu; the efficiency of a wood stove is assumed to be 50%.

** Moderate efficiency units: Gas furnace AFUE is 0.78 to 0.80/

Figure 7-6
Efficient Wood Heater Design

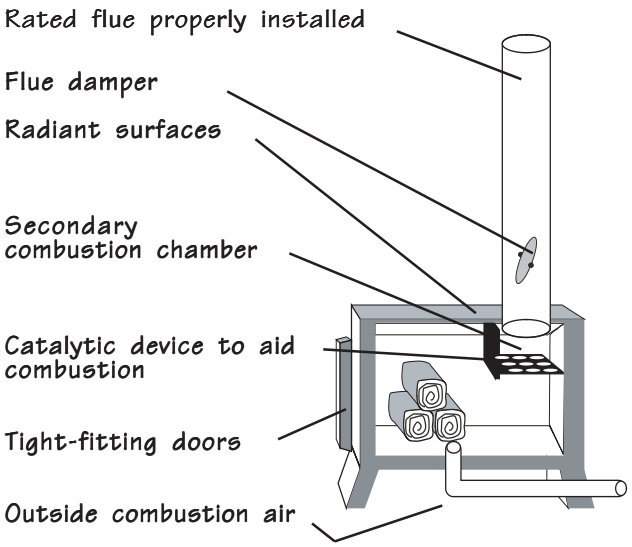

so large or even moderate-sized wood heaters may produce too much heat.

Unvented Fuel-Fired Heaters

Unvented heaters that burn natural gas, propane, kerosene, or other fuels are strongly discouraged. While these devices usually operate without problems, the consequences of a malfunction are life-threatening — they can exhaust carbon monoxide directly into household air. They also can create serious moisture problems inside the home and exhaust nitrogen oxides.

Most devices come equipped with alarms designed to detect air quality problems. However, many experts question putting a family at any risk of carbon monoxide poisoning — they see no rationale for bringing these units into a home. There are a wide variety of efficient, vented space heaters available.

Examples of unvented units to avoid include:

- ❒ Flueless gas fireplaces — use sealed combustion, direct vent units instead
- ❒ Room space heaters — choose forced-draft, direct-vent models instead

Figure 7-7
Unvented and Direct Vent Heaters

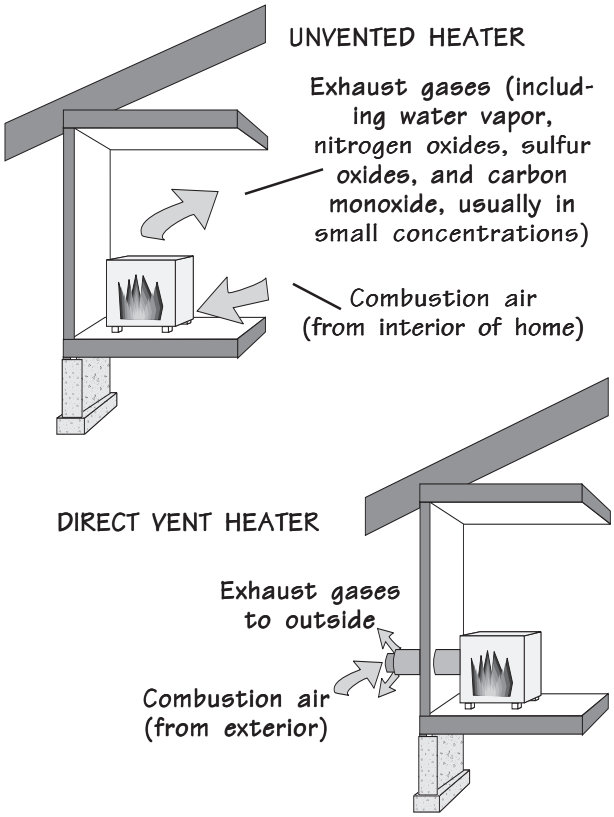

Ventilation and Indoor Air Quality

All houses need ventilation to remove stale interior air and excessive moisture. There has been considerable concern recently about how much ventilation is required to maintain the quality of air in homes. The sidebar on Indoor Air Quality addresses some of the major issues. While there is substantial disagreement on the severity of indoor air quality problems, most experts agree that the solution is not to build an inefficient, "leaky" home.

Research studies show that standard houses are almost as likely to have indoor air quality problems as energy efficient ones. Most building researchers believe that no house is so leaky that the occupants can be relieved of concern about indoor air quality. They recommend mechanical ventilation systems for all houses.

The amount of ventilation required depends on the number of occupants and their lifestyle, as well as the design of the home. The ASHRAE standard, "Ventilation for Acceptable Indoor Air Quality" (ASHRAE 62) recommends that houses have 0.35 natural air changes per hour (nach) or 15 cubic feet per minute of ventilation per occupant.

Older, drafty houses can have infiltration rates of 1.0 to 2.5 nach. Standard homes built today are tighter and usually have rates of from 0.5 to 1.0 nach. New, energy efficient homes often have less than 0.35 nach.

Infiltration is not a successful means of ventilation because it is not reliable and the quantity of incoming air is not controllable. Air leaks are unpredictable, and infiltration rates for all houses vary. For example, air leakage is greater during cold, windy periods and can be quite low during muggy, hot weather. Thus, pollutants may accumulate during periods of calm weather even in drafty houses. These homes will also have many days when excessive infiltration provides too much ventilation, causing discomfort, high energy bills, and possible deterioration of the building envelope.

Concerns about indoor air quality are leading more and more homeowners to install controlled ventilation systems that provide a reliable source

of fresh air. The simplest approach is to provide spot ventilation of bathrooms and kitchens to control moisture. Nearly all exhaust fans in standard construction are ineffective — a prime contributor to moisture problems in Louisiana homes. Builders should select quality fans with low noise ratings.

General guidelines call for providing a minimum of 50 cubic feet per minute (cfm) of air flow for baths and 100 cfm for kitchens. Manufacturers should supply the cfm rating for any exhaust fan.

The cfm rating typically assumes the fan is working against an air pressure resistance of 0.1 inch of water — the resistance provided by about 15 feet of straight, smooth metal duct. In practice, most fans are vented with flexible duct that provides much more resistance. Many ventilation experts suggest choosing a fan based on a resistance of 0.30 inches of water.

While larger fans cost more, they are usually better constructed and therefore last longer and run quieter. The level of noise for a fan is rated by *sones*. Choose a fan with a sone rating of 1.5 or less. Top quality models are often below 0.5 sones.

Many ceiling- or wall-mounted exhaust fans can be adapted as "in-line" blowers located outside of the living area, such as in an attic or basement. Manufacturers also offer in-line fans to vent a single bath or kitchen, or multiple rooms. Distancing the in-line fan from the living area lessens noise problems.

Bath and kitchen exhaust fans should vent to the outside — not just into an attic or crawlspace. Avoid side-vented stove units whose exhaust fans pull 400 to 700 cfm from the house. Unless some form of make-up air is supplied, these units can create high levels of negative pressure.

Always test a home for pressure imbalance problems when fans are operating. In tighter homes, a single bathroom exhaust fans may backdraft fireplaces or combustion appliances. If pressure problems exist, the home should have a source of make-up air, which is described in the next section.

While improving spot ventilation will certainly help control moisture problems, it may not provide adequate ventilation for the entire home. A *whole house ventilation system* can exhaust air from the kitchen, all baths, and perhaps the living area or bedrooms.

Figure 7-8
Ventilation with Spot Fans

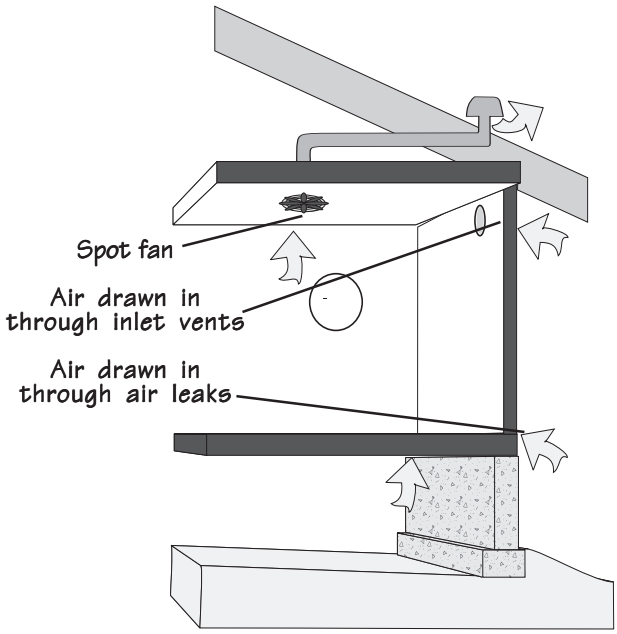

Figure 7-9
In-Line Ventilation Fans

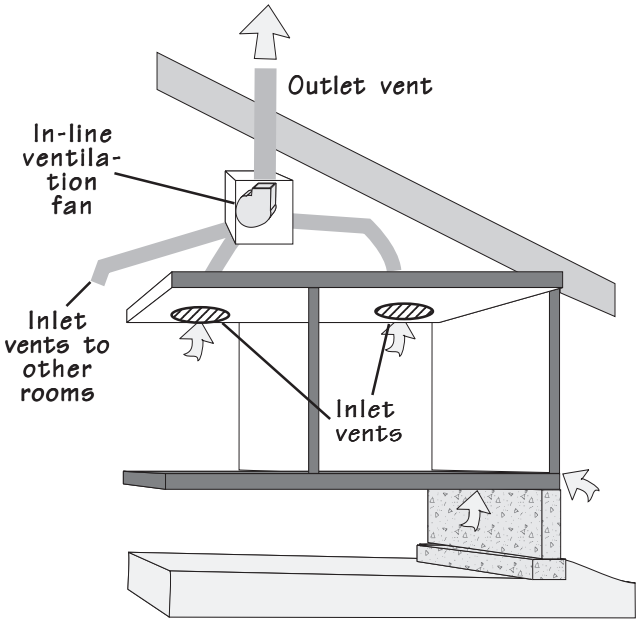

Whole house ventilation systems usually have large single fans located in the attic or basement. Ductwork extends to rooms requiring ventilation. These units typically have two-speed motors. The low speed setting gives continuous ventilation — usually 10 cfm per person or 0.35 ach. The high speed setting can quickly vent moisture or odors.

Supplying Outside Make-up Air

From air leaks

The air vented from the home by exhaust fans must be replaced by outside air. Air leaks can provide the make-up air, but it is far better to provide a controlled mechanism for make-up air as an integral part of the house design. Relying on air leaks requires no extra equipment; however, the occupant has little control over the air entry points. Plus, many of the air leaks come from undesirable locations, such as crawlspaces or attics. If the home is too airtight, the ventilation fans will not be able to pull in enough outside air to balance the air being exhausted. It will generate a negative pressure in the home, which may cause increased wear on fan motors. Plus, the exhaust fans may threaten air quality by pulling exhaust gases from flues and chimneys back into the home. The homeowner can alleviate the pressure problems by opening windows slightly though this may pose a home security risk.

From inlet vents

Providing fresh outside air through inlet vents is another option. These vents can often be purchased from energy specialty outlets by mail order. They are usually located in exterior walls. The amount of air they allow into the home can be controlled manually or by humidity sensors.

Locate inlet vents where they will not create uncomfortable drafts. They are often installed in bedroom closets with louvered doors or high on exterior walls. Ideally, they should be filtered and located as far as possible from all exhaust vents.

Via ducted make-up air

Outside air can also be drawn into and distributed through the home via the ducts for a forced-air heating and cooling system. This type of system usually has an automatically controlled outside air damper in the return duct system.

The blower for the ventilation system is either the air handler for the heating and cooling system or a smaller unit that is strictly designed to provide ventilation air. A disadvantage of using the HVAC blower is that incoming ventilation air may have sufficient velocity to affect comfort conditions during cool weather.

The ductwork for the heating and cooling system may be connected to a small outside return air duct with a damper that opens either when the ventilation fan operates or when the house goes to a negative pressure. The resulting reduced air flow should not adversely affect comfort.

Dehumidification Ventilation Systems

Louisiana homes are often more humid than desired. A combined ventilation-dehumidifier system can bring in fresh, outdoor air, remove its moisture, and supply it to the home. These systems can also filter incoming air. Because these systems require an additional mechanical device — a dehumidifier installed on the air supply duct — they should be designed for the specific needs of the home.

Heat Recovery Ventilators

Air-to-air heat exchangers, or heat recovery ventilators (HRV — described in Figure 7-10), typically have separate duct systems that draw in outside air for ventilation and distribute fresh air throughout the house. In winter, heat from stale room air is "exchanged" to the cooler incoming air. In summer, the hot outdoor air is cooled and may be partially dehumidified by the cooler exhaust air. Some models, called *enthalpy* heat exchangers, can also recapture cooling energy in summer by exchanging moisture between exhaust and supply air.

While energy experts have questioned the value of the heat saved in Louisiana homes for the $400 to $1,500 cost for an HRV, recent studies on enthalpy units indicate their dehumidification benefit in summer offers an advantage over ventilation-only systems. The value of any heat recovery ventilation system should not be determined solely on the cost of recovered energy — the controlled ventilation and improved quality of the indoor environment must be considered as well.

SAMPLE VENTILATION PLANS

Design 1: Upgraded Spot Ventilation

This relatively simple and inexpensive whole house ventilation system integrates spot ventilation using bathroom and kitchen exhaust fans with an upgraded exhaust fan (usually 100 to 150 cfm) in a centrally located bathroom. When the fan operates, outside air is drawn through inlets in closets with louvered doors. The fan is controlled by a timer set to provide ventilation at regular intervals. Interior doors are undercut to allow air flow to the central exhaust fan. The fan must be a long-life, high-quality unit that operates quietly. In addition to the automatic ventilation provided by this system, occupants can turn on all exhaust fans manually as needed.

Design 2: Whole House Ventilation System

This whole house ventilation system uses a centralized two-speed exhaust fan to draw air from the kitchen, bath, laundry, and living area. The blower is controlled by a timer. The system should provide approximately 0.35 ach on low speed and 1.0 ach on high speed. Outside air is supplied by a separate dampered duct connected to the return air system. When the exhaust fan operates, the outside air damper opens and allows air to be drawn into the house through the forced-air ductwork.

Design 3: Heat Recovery Ventilation (HRV) System

HRV's draw fresh outside air through ducts into the heat exchange equipment and recaptures heating or cooling energy from stale room air as it is being exhausted. Some systems, called enthalpy heat exchangers, also dry incoming humid air in summer — a particular benefit in the Southeast. Fresh air flows into the house via a separate duct system, which should be sealed as tightly as the HVAC ductwork. Exhaust room air can either be ducted to the exchanger from several rooms or a single central source.

Figure 7-10
Sample Ventilation Plans

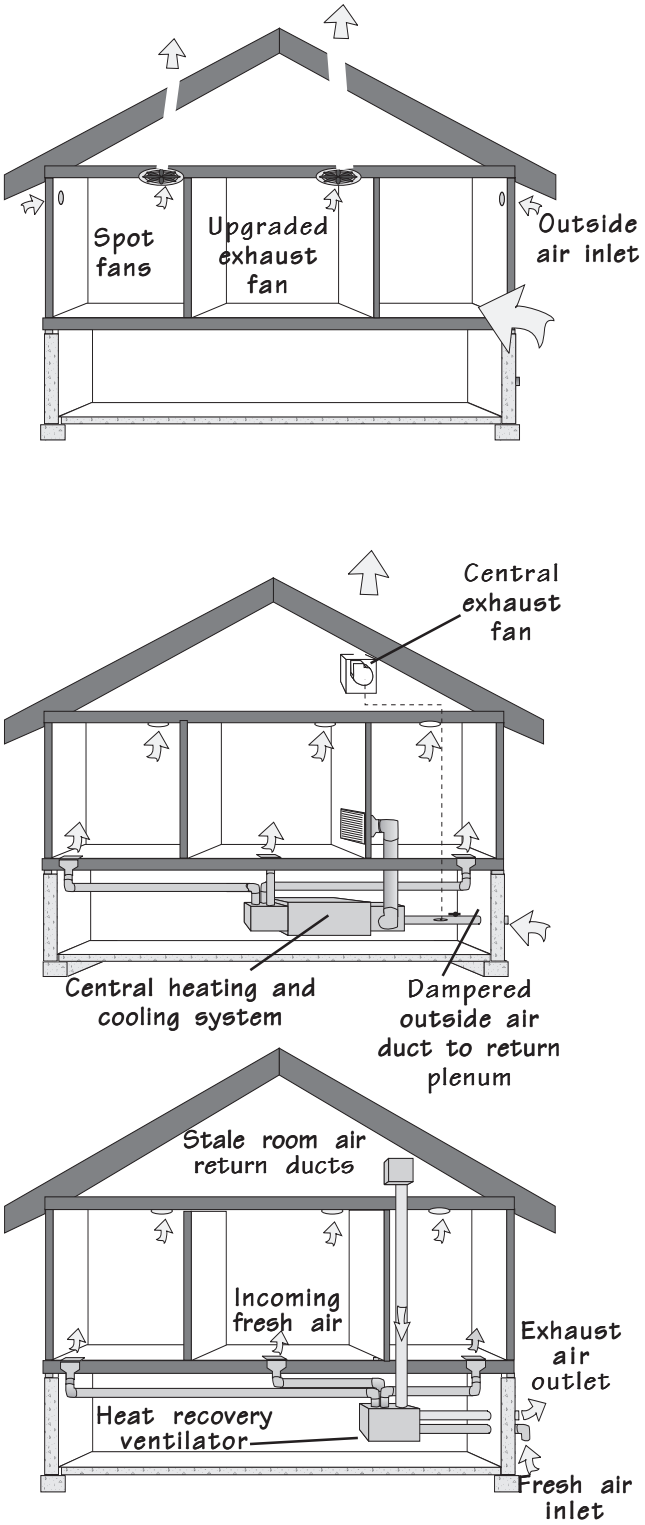

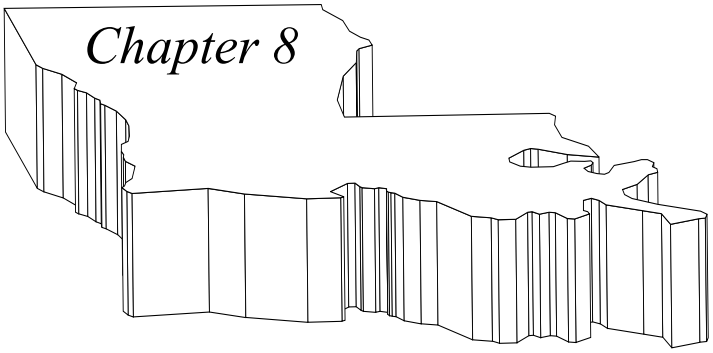

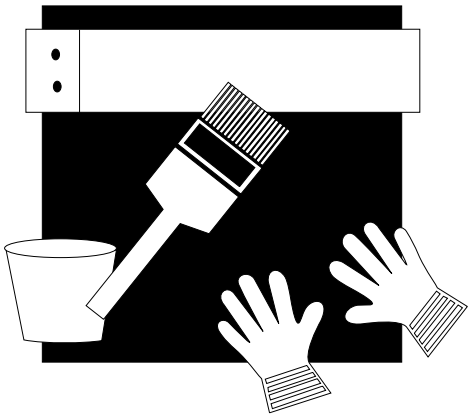

Duct Design and Sealing

THE PROBLEM OF DUCT LEAKAGE

Studies conducted throughout the country have found that poorly sealed ductwork is often the most prevalent and yet easily solved problem in new construction. Duct leakage contributes 10 to 30% of heating and cooling loads in many homes. In addition, duct leakage can lessen comfort and endanger health and safety.

Locating ducts in conditioned space eliminates many problems with leakage. They are installed in *chases* — framed air passageways situated behind the ceiling or wall finish. However, these chases are often connected more directly to unconditioned space than interior space. Therefore, it is important to seal these areas completely from unconditioned spaces.

The heating and cooling contractor should use proper materials when sealing ductwork — in particular, duct sealing mastic. Duct insulation does not provide an airtight seal. To ensure ducts are tight, have your HVAC contractor conduct a duct leakage test.

The 1995 Model Energy Code and the International Energy Conservation Code require that HVAC contractors must use mastic and mesh tape to seal leaks. This new provision reflects the universal recognition that duct leakage not only is a cost effective energy efficiency measure, but it also improves comfort and most importantly, makes our homes healthier places in which to live. Chapter 3 on Concepts explains some of the health risks of leaky ductwork in detail.

Duct Leaks and Air Leakage

Forced-air heating and cooling systems should be *balanced* — the amount of air delivered through the supply ducts should be equal to that drawn through the return ducts. If the two volumes of air are unequal, then the pressure of the house can be affected. Pressure imbalances can increase air leakage into or out of rooms in the home.

Pressure imbalances can create dangerous air quality in homes including:

- ❒ Potential backdrafting of combustion appliances such as fireplaces, wood stoves and gas burners.
- ❒ Increasing air leakage from the crawlspace to the home, which may draw in dust, radon, mold, and humidity.
- ❒ Pulling pollutants into the air handling system via return leaks.

Typical causes and concerns of pressure imbalances, addressed more fully in Chapter 3, include:

- ❒ HVAC systems with excessive supply leaks can cause homes to become depressurized, which may cause backdrafting of combustion appliances inside the home.
- ❒ HVAC systems with excessive return leaks can cause homes to become pressurized and create negative pressures around the air han-

dling unit; which may cause combustion appliances near the air handling unit to backdraft.

- ❒ Homes with central returns can have pressure imbalances when the interior doors to individual rooms are closed:
  - ❍ The rooms having supply registers and no returns become pressurized, while the areas with central returns become depressurized.
  - ❍ Often the returns are open to living rooms with fireplaces or combustion appliances.
  - ❍ When these spaces become sufficiently depressurized, the flues will backdraft.
- ❒ Tighter homes with effective exhaust fans, such as kitchen vent hoods, clothes dryers, and attic ventilation fans, may experience negative pressures when these ventilation devices operate.

Figure 8-1 shows the impact of return and supply leaks on equipment efficiencies in attic HVAC systems. For example, a HVAC systems having 15% return leakage in a moderately hot attic (120°F) can suffer a 50% drop in efficiency — from EER (Energy Efficiency Ratio) 10 to EER 6. The EER measures the number of Btu's per hour of cooling a watt of electricity provides. In addition, the supply air temperature may rise and not provide adequate comfort on hot outside days.

Figure 8-1
Efficiency Losses Due to Attic Return and Supply Leaks

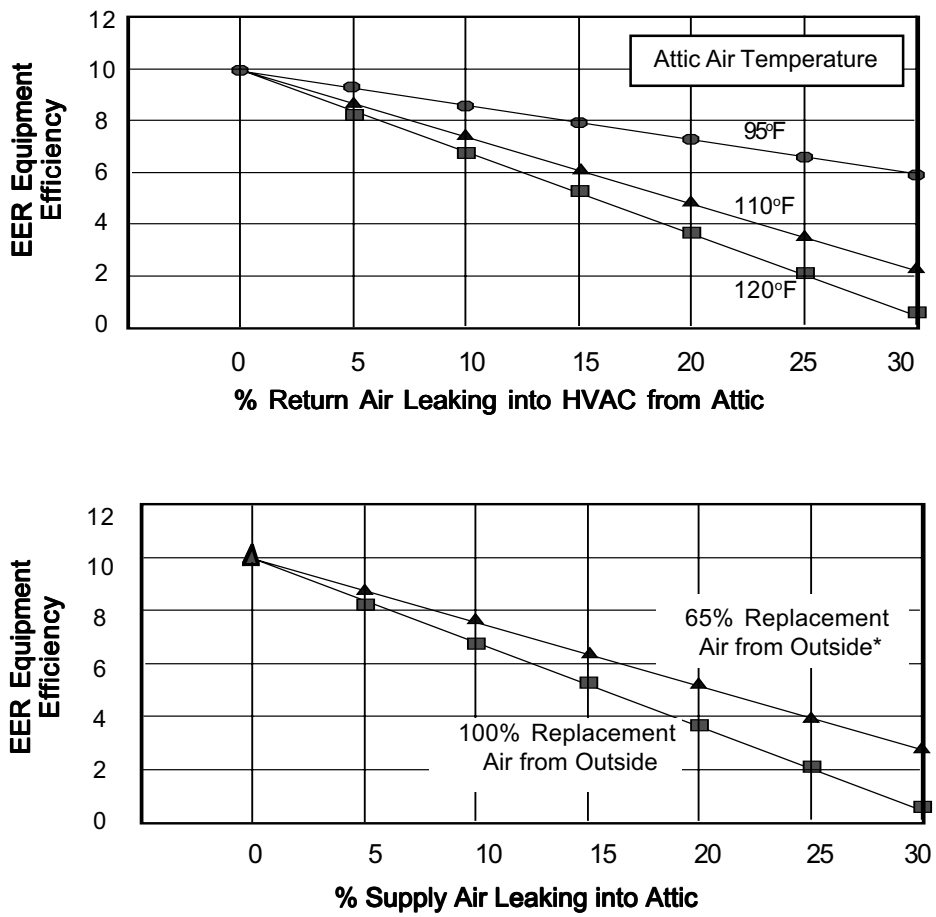

* 65% Replacement Air from Outside means that of the air lost from the supply duct, 65% leaks into the house from outside, while the other 35% finds its way from the supply leak back into the house.

Likewise, the second chart shows the drop in performance of cooling systems with supply leaks. When HVAC supply ducts leak air to the outside, the return side of the system still requires the full amount of air back. It will depressurize the house in an effort to pull the lost air back into the system. In a home with 15% supply leaks, if 100% of the replacement air comes from outside, the efficiency of the system will drop from EER 10 to about EER 5.0, a 50% reduction in efficiency. Note that duct leakage of only 5% results in efficiency losses of 10% to almost 20%.

Thus, leaky ducts can reduce equipment efficiencies dramatically. They can also lower supply air temperatures in winter, which may pose major comfort problems for the occupants.

Sealing Air Distribution Systems

Duct leakage should be eliminated. In standard construction, many duct seams are not sealed or are poorly sealed with ineffective materials such as cloth "duct tape," unrated aluminum tape, or similar products with lower quality adhesives not designed to provide an airtight seal over the life of the home. Use only the following products for sealing the components of the air distribution system:

- ❒ Nontoxic duct sealing mastic with fiberglass mesh tape — highly preferred — may add $20 to $55 to the cost of a $5,000 system, but provides a lifetime seal.

TESTING FOR DUCT LEAKAGE

The best method to ensure airtight ducts is to pressure test the entire duct system, including all boot connections, duct runs, plenums, and the air handler cabinet. Much like a pressure test required for plumbing, ductwork can be tested during construction so that problems can be easily corrected.

In most test procedures, a technician temporarily seals the ducts by taping over the supply registers and return grilles. Then, the ducts are pressurized to a given pressure — usually 25 Pascals using a duct testing fan. This pressure is comparable to the average pressure the ducts experience when the air handler operates.

While ducts are pressurized, the technician can read the total duct leakage of the HVAC system.

Some energy efficiency programs require that the cubic feet per minute of duct leakage measured at a 25 Pascal pressure (CFM25) be less than 3% of the floor area of the house. For example, a 2,000 square-foot house should have less than 60 (2,000 x 0.03) CFM25 of duct leakage.

Another test is to use a blower door (described in Chapter 3) and a duct testing fan together to measure duct leakage after construction is complete. This procedure gives the most accurate measurement of duct leakage to the outside of the home. A duct leakage test can usually be done in about one hour for an average -sized home.

Figure 8-2
Duct Test on Return Grille

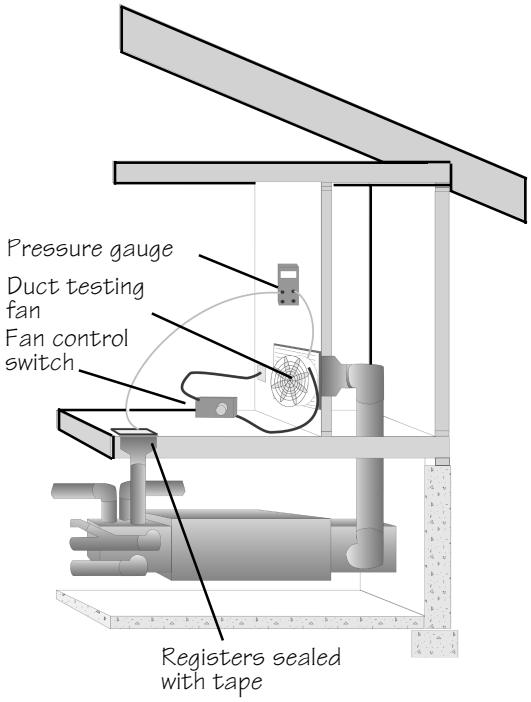

- ❒ Aluminum tape with a UL-181 A or B rating or "mastic" tapes with improved adhesives.
  - ❍ Tape must be installed properly to be effective.
  - ❍ The duct surface must be clean of oil and dirt, and the tape must fully adhere to the duct with no wrinkles.
  - ❍ A squeegee must be used to remove air bubbles from beneath the taped surface.
  - ❍ Costs only $4 to $5 more than "silver tape," which has an inferior adhesive.
- ❒ High quality caulking or foam sealant.

Proper sealing and insulation of the ductwork in unconditioned areas requires careful attention to detail and extra time on the part of the heating and air conditioning contractor. The cost of this extra time is well worth the substantial savings on energy costs, improved comfort, and better air quality that an airtight duct system offers.

The easiest answer to the question of where to seal air distribution systems is "everywhere." A list of the key locations is as follows:

High priority leaks

- ❒ Disconnected components, including takeoffs that are not fully inserted, ducts that have been dislodged, tears in flex-duct, and strained connections between ductwork (visible where ducts bend where there is no elbow).
- ❒ The connections between the air handling unit and the supply and return plenums.
- ❒ All of the seams in the air handling unit, plenums, and rectangular ductwork — look particularly underneath components and in any other tight areas. Also, seal the holes for the refrigerant, thermostat, and condensate lines. Use tape rather than mastic to seal the seams in the panels of the air handling unit so they can be removed during servicing. After completing service and maintenance work, such as filter changing, make sure the seams are retaped.
- ❒ The return takeoffs, elbows, boots, and other connections. If the return is built into an interior wall, all connections and seams must be sealed carefully. Look especially for unsealed areas around site-built materials.
- ❒ The takeoffs from the main supply plenum and trunk lines.
- ❒ Any framing in the building used as ductwork, such as a "panned" joist in which sheet metal nailed to floor joists provides a space for conditioned air to flow. It is preferable to avoid using framing as a part of the duct system.
- ❒ The connections near the supply registers — between the branch ductwork and the boot, the boot and the register, the seams of the elbows, and all other potential leaks in this area.

Moderate priority leaks

- ❒ The joints between sections of the branch ductwork.

Low priority leaks

- ❒ Longitudinal seams in round metal ductwork.

Figure 8-3
Sealing Flex-duct Collar with Mastic

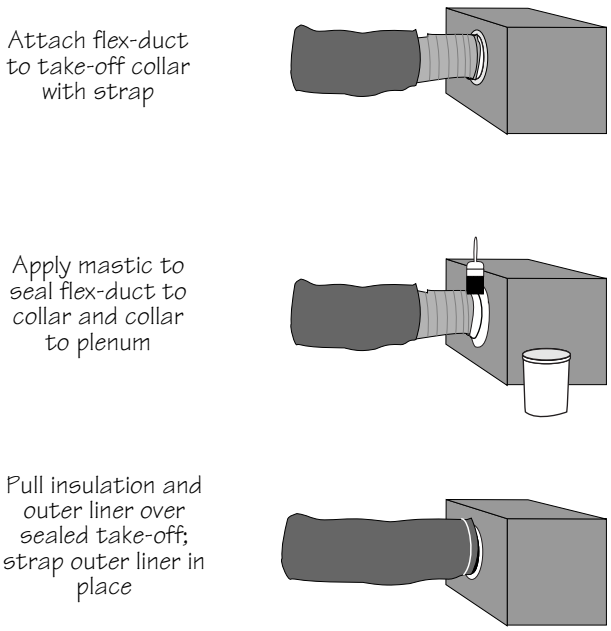

Figure 8-4
Disconnected Ducts Are High Priorities

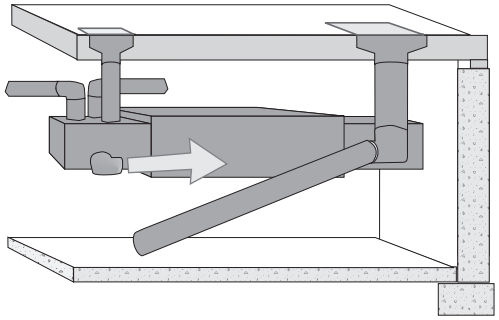

Dislodged supply duct

Ducts can become disconnected during initial installation, maintenance, or even normal operation. They should be checked periodically for problems.

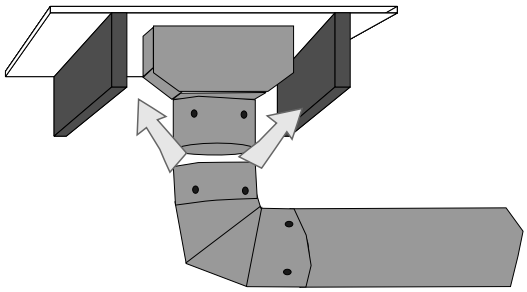

Disconnection at boot

Sometimes, disconnected ducts can be hidden behind the insulation. Look for kinks or curves where there is no elbow.

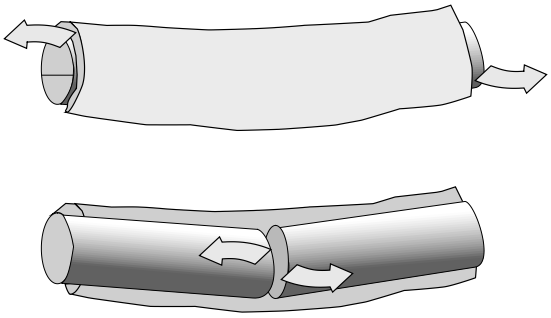

Figure 8-5
Duct Leaks in Inside Spaces

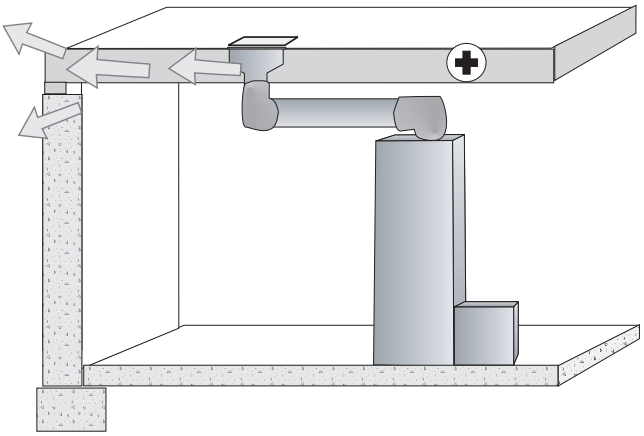

Although this supply duct is theoretically in conditioned space, the supply leaks pressurize the band joist area and air leaks to the outside. The best solution — seal all duct leaks and all building envelope air leaks

Figure 8-6
Seal All Leaks in Air Handling Unit

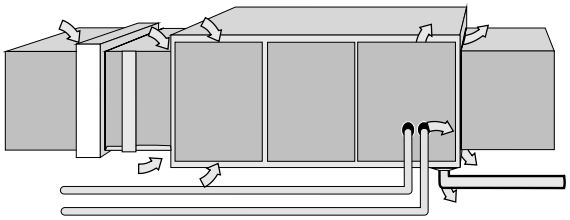

Virtually all air handling cabinets come from the factory with leaks, which should be sealed with duct-sealing mastic. Removable panels should be sealed with tape.

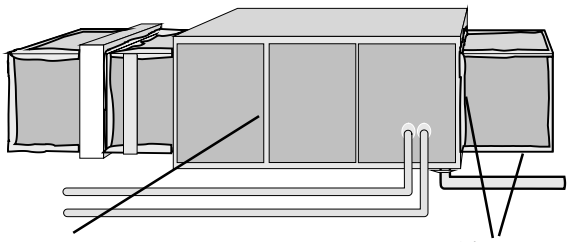

Figure 8-7
Shelf-Mounted Systems Without Returns

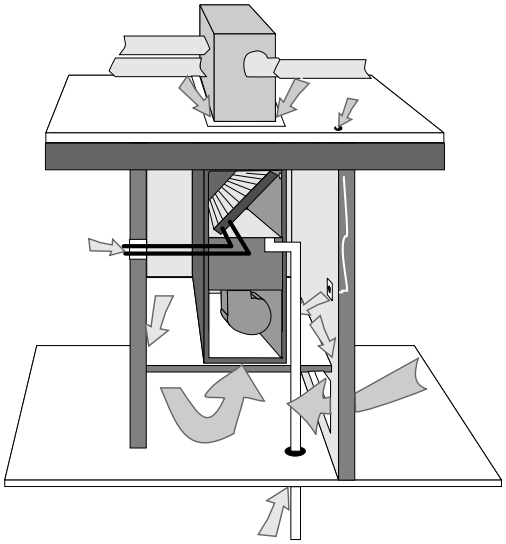

Non-ducted returns can severely depressurize mechanical room closets, not only sapping the system's efficiency, but also creating ideal conditions for backdrafting and other air quality problems.

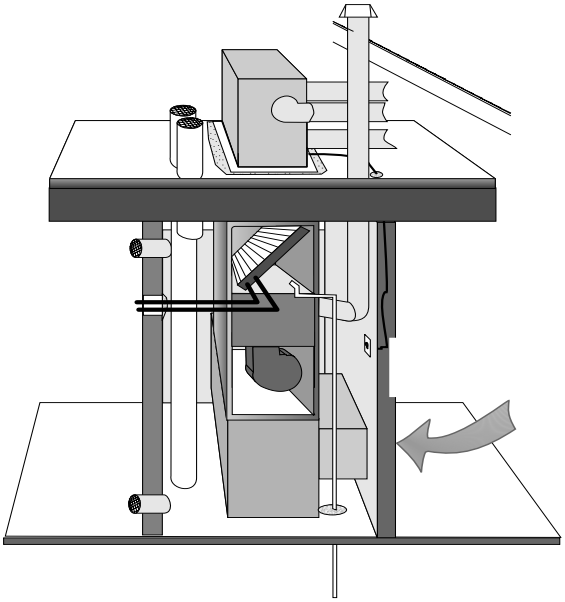

The return should be connected to the home via well sealed ductwork. All holes from the mechanical room closet to other spaces should be completely sealed.

Figure 8-8
Seal All Leaky Takeoffs

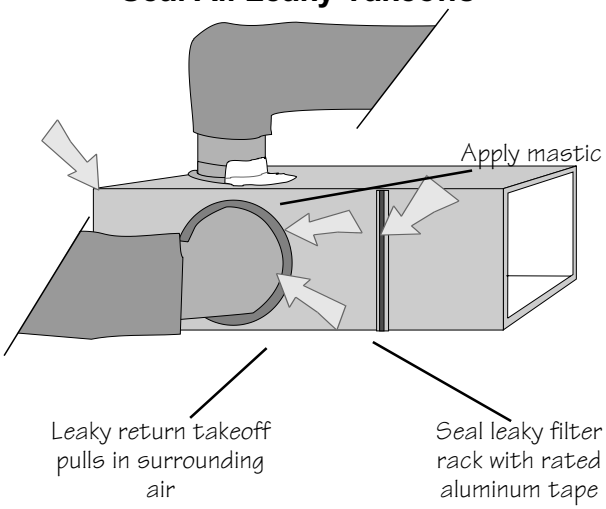

Figure 8-9
Sealing Leaky Boots

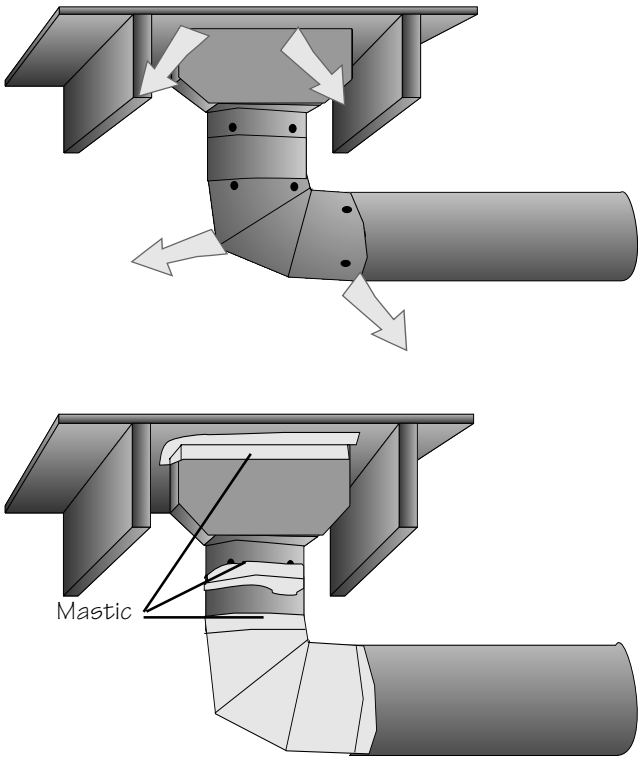

Use mastic to completely seal all leaky seams and holes. Use mesh tape with mastic to cover cracks over 1/8-inch wide.

DUCT DESIGN

Duct Materials

The three most common types of duct material used in home construction are *metal, fiberglass duct board*, and *flex-duct*. Both metal and fiberglass duct board are rigid and installed in pieces, while flex-duct comes in long sections.

Flex-duct is usually installed in a single, continuous piece between the register and plenum box, or plenum box and air handler. Be careful not to tear the soft lining material. The flex-duct must also not be pinched or constricted. Long flex-duct runs can restrict air flow, so they must be designed and installed carefully. Flex-duct takeoffs, while often airtight in appearance, can have substantial leakage and should be sealed with mastic. Always select duct insulation with a shiny, metal foil exterior covering to reduce radiant heat gain.

Round and rectangular metal duct must be sealed with mastic and insulated during installation. It is important to seal the seams and joints first, because the insulation does not stop air leaks.

Metal ducts often use fiberglass insulation having an attached metal foil vapor retarder. The duct insulation should be at least R-6, and the vapor retarder should be installed to the outside of the insulation — facing away from the duct. The seams in the insulation are usually stapled together around the duct and then taped. Duct insulation in homes at least two-years old provides visible clues about duct leakage — when the insulation is removed, the lines of dirt in the fiberglass often show where air leakage has occurred.

Sometimes, rectangular metal duct used for plenums and larger trunk duct runs is insulated with duct liner, a high density material that should be at least 1-inch thick. Many homeowners have concerns about the long term effects of the duct liner exposed to the air flowing through the system. They prefer to insulate the outside of the ductwork, rather than the inside.

Sizing and layout

The size and layout of the ductwork affects the efficiency of the heating and cooling system and comfort levels in the home. The proper duct size depends on:

- ❒ The estimated heating and cooling load for each room in the house.
- ❒ The length, type, and shape of the duct.
- ❒ The operating characteristics of the HVAC system (such as the pressure, temperature, and fan speed).

Figure 8-10
Types of Ductwork

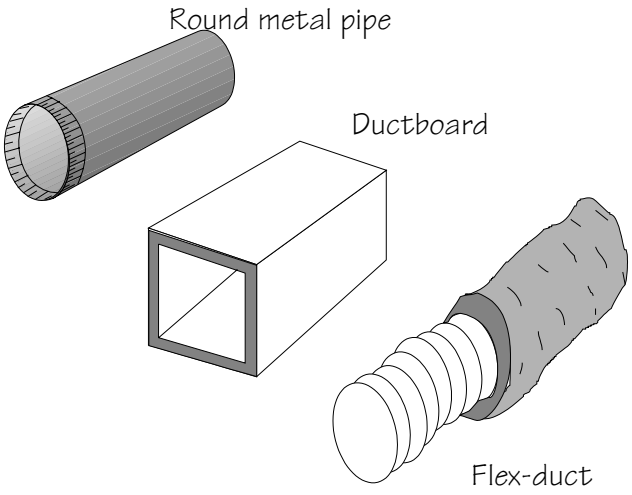

The lower temperature of the heated air delivered by a heat pump affects the placement of the registers. A heat pump usually supplies heated air between 90°F and 110°F. At these temperatures, air leaving registers may feel cool. They should be placed so as to avoid blowing air directly onto people. Fuel-fired furnaces typically deliver heated air at temperatures between 110°F and 140°F, 40°F to 70°F greater than room temperature, so placement of the supply registers is less important to maintain comfort.

HVAC contractors usually locate supply registers on outside walls under or above windows, and place return registers towards the interior, typically in a central hallway.

Some builders of energy efficient homes have found little difference in temperature between interior areas and exterior walls because of the extra energy features. Locating the supply registers on exterior walls is not as necessary to maintain comfort. These builders can trim both labor and material costs for ductwork by locating supply and return ducts near the core of the house.

In standard duct design, virtually all supply ducts are 6-inch flex-duct or round metal pipe. Most standard designs have only one return for each floor.

The standard approach of using all 6-inch branch ducts with a single return works for some homes, but can create operating problems for others, including:

- ❒ Too much heating and cooling supplied to small rooms, such as bathrooms and bedrooms with only one exterior wall.
- ❒ Inadequate airflow, and thus, insufficient heating and cooling, in rooms located at the greatest distance from the air handler.
- ❒ Over-pressurization of rooms when interior doors are closed.

The heating and cooling industry has comprehensive methods to size supply and return ductwork properly. These procedures are described fully in *Manual D, Duct Design* published by the Air Conditioning Contractors' Association.

Unfortunately, few residences have ductwork designed via *Manual D*. The primary "design" is determining, usually via intuition, how many 6-inch ducts to install in each room.

Figure 8-12 shows the size ductwork *Manual D* would specify for a small home. The design is vastly different than the typical all 6-inch system. The advantage of proper design is that each room receives air flow proportionate to its heating and cooling load, thus increasing overall comfort and efficiency.

The following recommendations, while no substitute for a *Manual D* calculation, should improve system performance:

- ❒ If two rooms have similar orientation, window area, and insulation characteristics, but one room is considerably farther from the air handling unit than the other, consider increasing the size of the ductwork going to the farthest room.
- ❒ Bonus rooms over garages often need additional or larger supplies.
- ❒ Rooms with large window areas may warrant an extra supply duct, regardless of room size.
- ❒ Likewise, large rooms with few windows, only one exterior wall, a well insulated floor, and conditioned space above may need only one small duct.
- ❒ Ductwork air flow can be adjusted to meet each room's needs using manually controlled dampers and an air flow measurement device.

Figure 8-11
Comparison of Air Flow in Different 6-inch Ducts

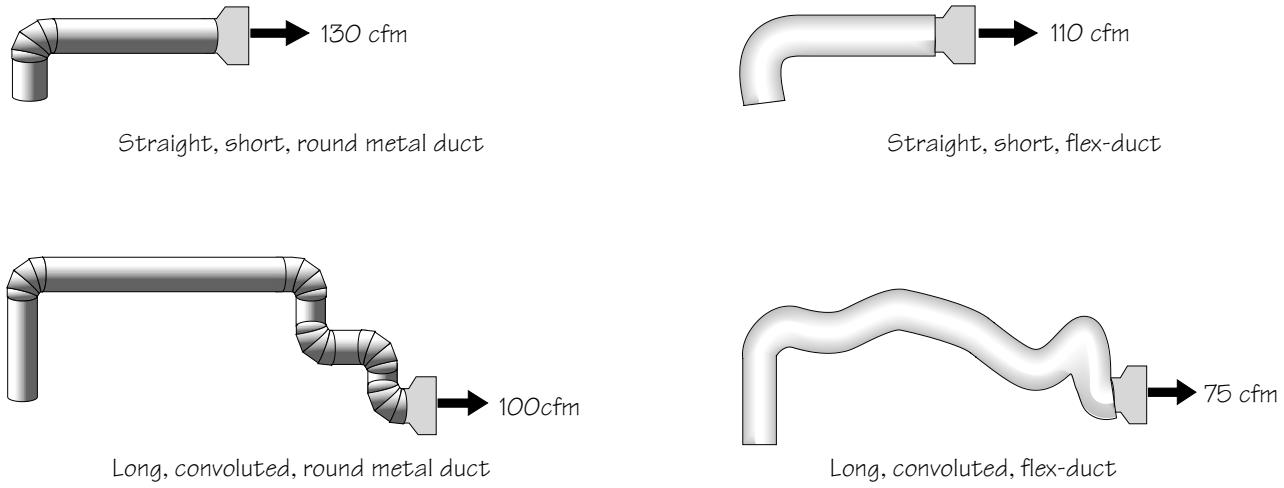

Table 8-1
Checking System Air Flow

Use this form to check the ductwork for proper sizing:
Step 1: Find the system's cooling capacity in tons.
Step 2: Multiply the tonnage in Step 1 by 400 to get the desired total air flow in cubic feet per minute (cfm) = 400 x _____ tons = _____ cfm total
Step 3: Check the supply air flow
a. Determine the number of supply registers connected to 4", 6", 8", and 10" branch ducts .
b. Fill in column 2 in the chart below. Then multiply the number of ducts by the air flow and put the result in Column 4. Add the flows in Column 4. If the total is within 10% of the actual air flow (from Step 2), the supply ductwork is probably adequate.
Step 4: Check the return air velocity
a. Measure the total area of all return grilles = _____square inches

1. Branch Duct Size	2. Number of Supply Registers	3. Air Flow per Register (cfm)	4. Duct Air Flow (cfm) Step 2 x Step 3
4"		50	
6"		100	
8"		200	
10"		400	
Total Air Flow			cfm

b. Multiply the total area in Step 4a by 70% = _____square inches
c. Divide the answer to Step 4b by 144 to get square feet of area = _____ square feet
d. Write the total air flow here = _____ cfm (total cfm in chart above)
e. Divide the air flow in Step 2 by the area inStep 4c to get the estimated return air velocity:
airflow _____ / area _____ = _____ ft/minute
If the velocity is over 650 ft/ minute, add a return or increase the size of a return.

Example:
Home with 2.5 ton system, one 4-inch, eight 6-inch, and one 8-inch branch supply ducts.
Step 1: 2.5 tons
Step 2: 400 x 2.5 = 1,000 cfm
Step 3:

1. Branch Duct Size	2. Number of Supply Registers	3. Air Flow per Register (cfm)	4. Duct Air Flow (cfm) Step 2 x Step 3
4"	1	50	50
6"	8	100	800
8"	1	200	200
10"	0	400	
Total Air Flow			1,050 cfm

Since 1,050 cfm is within 10% of system air flow, there should be sufficient supply ductwork.

Figure 8-12
Duct Design Using Manual D

(In standard duct installation, all supply registers would be 6 inches in diameter, and there would be a single 14-inch to 16-inch return.)

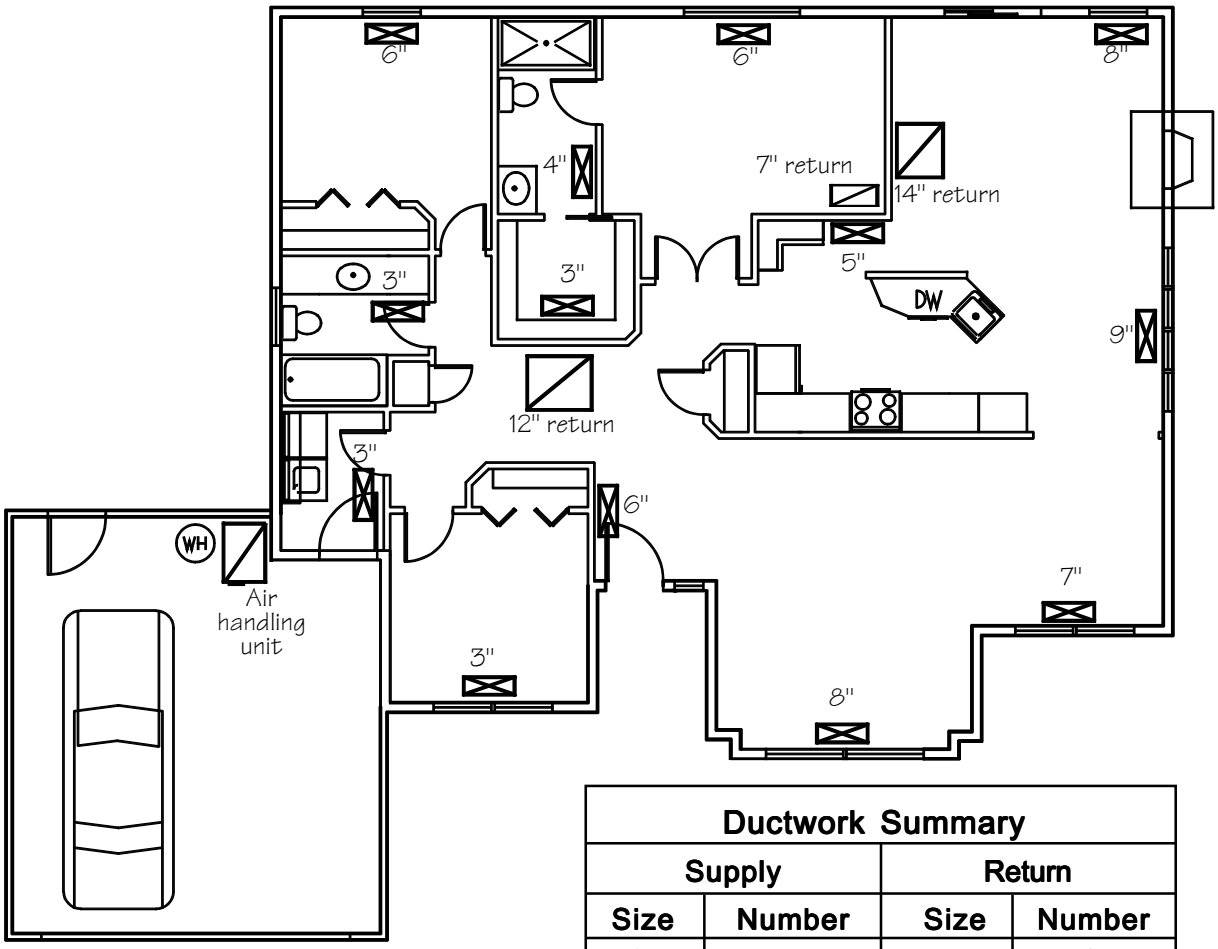

Ductwork Summary			
Supply		Return	
Size	Number	Size	Number
3"	4	7"	1
4"	1	12"	1
5"	1	14"	1
6"	3		
7"	1		
8"	2		
9"	1		

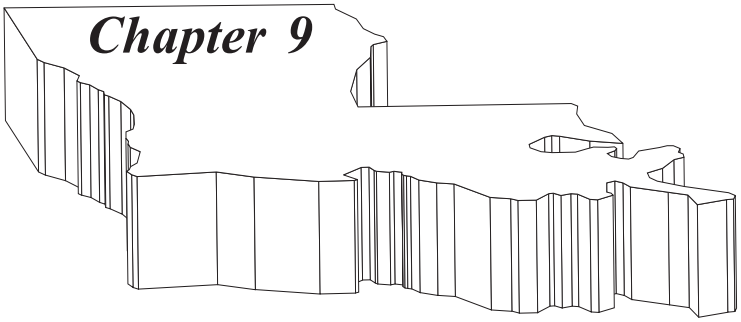

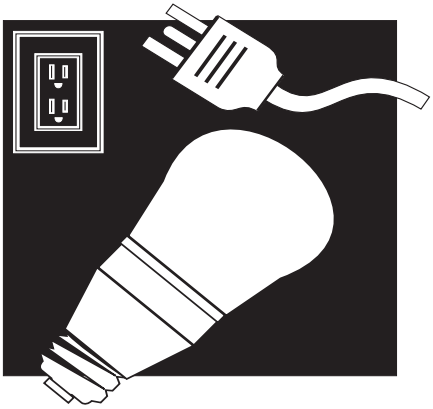

Water Heating, Appliances and Lighting

Energy costs for water heating can be as great as those for heating or cooling a house. An average family of four in Louisiana will spend about $300 to $400 annually for electric or propane water heating and $125 to $200 for natural gas. However, it is easy to cut those bills dramatically with conservation measures and water heating alternatives.

Energy Conservation for Water Heating

No matter what type of energy source is used to heat water, be certain to take advantage of the savings from conservation measures:

- ❒ Lower the temperature setting on the water heater to 120°F.
  - ❍ Saves energy
  - ❍ Reduces the risk of injury from scalding
  - ❍ Provides plenty of hot water
  - ❍ If hotter temperatures are needed for dish washing, select dishwashers with booster heaters.
- ❒ Wrap the outside of the water heater tank with an insulation jacket.
  - ❍ Simple to install — payback less than 1 year
  - ❍ Do not cover the relief or drain valve
  - ❍ For gas water heaters, do not block the air inlet to the burner or the flue vent on the top
- ❒ Insulate at least four feet of all pipes connected to unit, but pipe insulation is inexpensive and the slit foam tube type is easy to apply. Therefore, it will pay to insulate as much of the outlet run that is accessible. If the inlet pipes are exposed to cold temperatures, insulate those, too.
- ❒ Low-flow showerheads provide about a 1-year payback. Well designed fixtures deliver water at 2.5 or fewer gallons per minute and still provide plenty of force.
- ❒ Heat traps (Figure 9-2) keep hot water from circulating freely out of the water heater.

Figure 9-1
Water Use in Typical Homes
(In Gallons per Day)

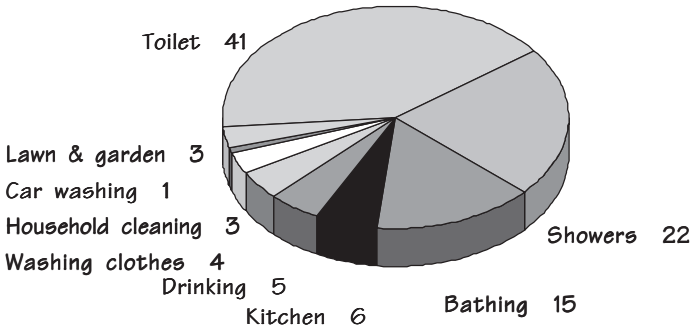

Source: "Water delivery crisis as severe as drought," Atlanta Constitution, June 21, 1988, page 10A.

- ❒ Low-flow aerators on sink and lavatory faucets
  - ❍ Save on energy bills
  - ❍ Kitchen sink may need a higher volume flow faucet for filling pots and pans more quickly

SELECTING AN EFFICIENT WATER HEATER

Water heaters come in a range of efficiencies, warranties, and fuel sources. Their efficiencies are measured by a rating known as the *energy factor* (EF).

Gas Water Heaters

Higher efficiency gas water heaters have energy factors over 0.80. In addition to variations in insulation, gas water heater efficiency is also affected by burner design, the shape of the flue baffles which slow the hot

Table 9-1
Energy Factors for High Efficiency Water Heaters*

Size of Unit (gallons)	Energy Factor Range
Gas-Fired	
30	0.54 - 0.64
40	0.61 - 0.86
50	0.73 - 0.83
Electric Resistance	
30	0.91 - 0.95
40	0.91 - 0.94
50	0.90 - 0.94
60-66	0.90 - 0.94
80	0.89 - 0.92

*Source: Alex Wilson and John Morrill. ***Consumer Guide to Home Energy Savings***. American Council for an Energy Efficient Economy. Washington, DC. 1995.

Figure 9-2
Insulating Jackets for Electric and Gas Water Heaters

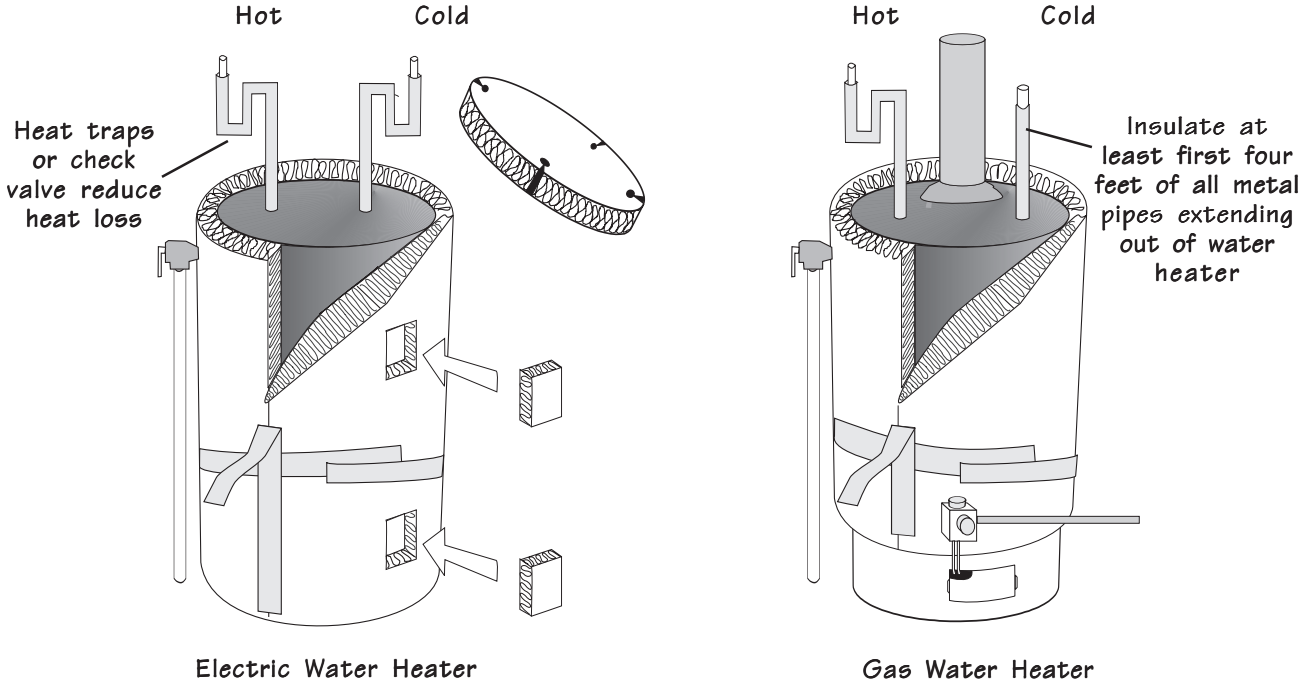

exhaust gases down to increase heat transfer to the water, and the amount of surface area between the flue gases and the water.

Higher efficiency gas water heaters have blowers for venting and delivery of combustion air. Most of these units can be vented out of the sidewall of the home rather than the roof because of the forced air blower.

Fuel-fired water heaters should be located in unconditioned spaces that are isolated in terms of pressure and air leakage from the living area. Examples include crawlspaces, attics, and unconditioned basements.

If fuel-fired water heaters are located in interior spaces, such as interior mechanical rooms connected to conditioned spaces or laundry rooms, they should include provisions for outside combustion air, such as a direct-vent unit. Direct-vent units have a double flue pipe that includes both an intake for combustion air and a flue for exhaust gases.

More sophisticated energy features found on high efficiency furnaces, such as electronic ignition, flue dampers, and condensing heat exchangers, are being introduced into domestic water heaters.

When shopping for a water heater, use the *Energy Guide* sticker to compare the estimated annual energy cost for a specific water heater with comparable models. The estimated annual cost shown in bold print on the sticker uses the national average cost of fuel, which could differ significantly in your area.

Electric Water Heaters

For electric water heaters, higher efficiency units have Energy Factors up to 0.97. Often, the additional cost of a high efficiency unit is quite low compared to the savings. Because of the high cost of electric water heating, more efficient options such as heat recovery units, heat pump water heaters, and solar water heaters should always be considered.

Heat recovery units

A *heat recovery unit*, also called a *desuperheater*, recovers excess heat from an air conditioner or heat pump to provide "free" hot water. The heat is captured from the refrigerant line between the outside condenser and the inside equipment (see description of how air conditioners work in Chapter 7). A heat exchanger mounted on this line extracts heat from the superheated, high pressure, refrigerant gas, which is hot enough to be able to lose some heat and still not begin to condense into a liquid.

During the summer, the desuperheater can usually provide 100 percent of the hot water needs of a family and improve the efficiency of the air conditioner or heat pump. In the spring and fall, with no need for heating or cooling, the desuperheater is ineffective. In the winter, if connected to a heat pump, the desuperheater can still provide hot water more efficiently than a conventional electric water heater. The energy savings from a desuperheater connected to a central air conditioner depend on how often the air conditioner is used. Savings are typically 20 to 40% on annual water heating bills.

The size and efficiency of the water heater and cooling equipment will affect the performance of a desuperheater. Combining desuperheaters with new higher efficiency air conditioners or heat pumps, which have lower refrigerant temperatures, can reduce the energy savings. The HVAC system should be at least 2 tons in size to be used effectively with a desuperheater. Desuperheaters range in cost from $550 to $750 and save $50 to $180 annually. Before installing a unit, make sure it will not void warranties on mechanical equipment.

Heat pump water heaters

Heat pump water heaters operate at about twice

Figure 9-3
Heat Pump Water Heaters

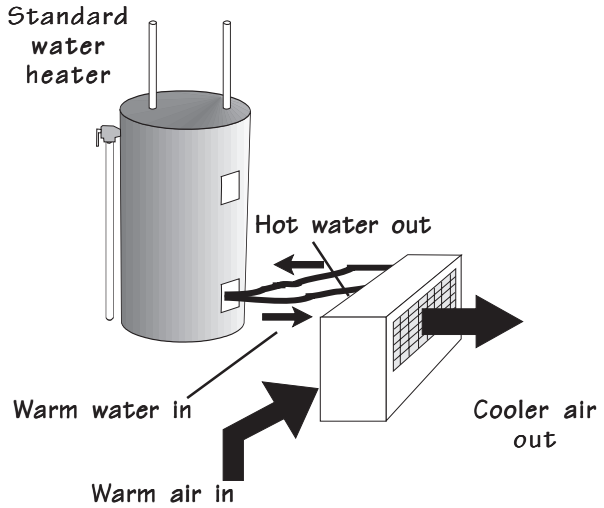

the efficiency of standard electric water heaters. They cost $700 to $1,200 installed and can save $100 to $200 each year.

Heat pump water heaters use surrounding air as a heat source. As they extract heat from the air, they provide some dehumidification and cooling — about 40,000 Btu per day for a typical house. While the cool dry air is an advantage in summer, it is detrimental in winter. It is best to locate the unit in an unconditioned area, such as an unheated basement, where the cooling effect will not cause winter discomfort or higher heating bills. The area must stay above 45°F for the unit to operate properly. To avoid damaging the equipment, never install a heat pump water heater in areas where the temperature drops below freezing.

Heat pump water heaters are sold either as separate cabinets which are connected to a conventional water heater or as packages complete with the hot water storage tank. When operating, they are about as loud as an air conditioner, so do not locate them where noise will be a problem.

Solar Water Heaters

For homes that use a large amount of hot water and receive full sun year-round, solar water heaters may be economical. Most solar water heaters operate by preheating water for a standard water heater. Normally, gas or electric water heaters bring incoming cold water to a desired temperature of about 120°F. A solar water heater uses sunlight to preheat cold water and stores it, often at temperatures well above 120°F.

If the solar-heated water is hot enough, the standard water heater does not need to add more heat. If the water is cooler than needed, the standard water heater will operate as a backup to increase the temperature. Thus, the temperature or availability of hot water is never affected. Of course, even when the solar-heated water is at temperatures below 120°F, the backup unit will use less energy than it would to heat incoming cold water.

A variety of solar water heaters are available commercially, most of which should last 15 years or longer. They are divided into three categories: active, thermosiphon, and batch. In *active* and *thermosiphon* water heaters, solar panels or collectors trap the sun's heat. Water or other fluid running through the collectors absorbs heat and increases in temperature. The liquid then travels to a storage tank where the heat it gains is stored.

Active systems use electric pumps to move the water from the collectors to the storage tank. Thermosiphon water heaters require no outside power because they use the natural tendency of water to rise as its temperature increases to push water from the collectors to the storage tank, which must be located higher than the collectors.

Some solar water heaters use a single, large storage tank that has a backup source of water heating. Other systems use a standard water heater as a backup and a separate solar storage tank. Active and thermosiphon systems cost from $1,500 to $5,000 and supply up to 70 percent of a family's annual hot water needs.

The tilt angle of the glazing — the angle between the glazing and the horizon — should be within 15 degrees of the latitude. For Louisiana, the tilt angle can be between 18 and 50 degrees. The best tilt angle for a year-round solar device, such as a solar water heater, is 35 to 45 degrees. For solar collectors used only for winter heating, tilt angles can be raised to between 50 and 60 degrees.

Solar water heaters must be protected from freezing. Active and thermosiphon systems use nonfreezing fluids or automatic drain systems to prevent freezing.

Figure 9-4
Active Solar Water Heating Systems

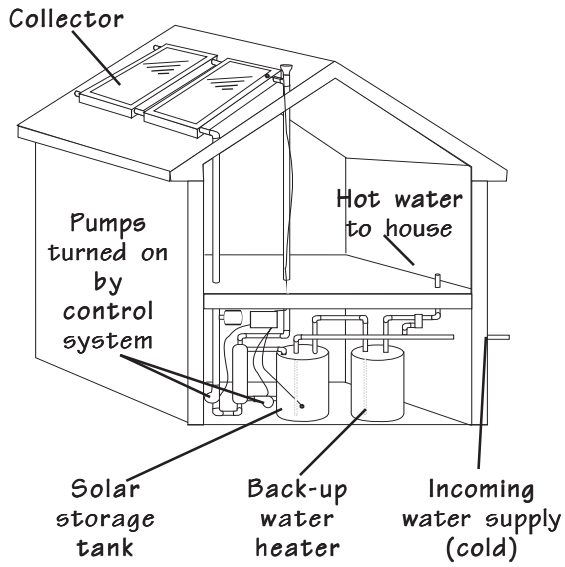

Batch water heaters, also called breadbox water heaters, are simpler than active or thermosiphon systems. However, they provide less hot water, usually about 15 to 40 percent of a family's yearly demand. Batch water heaters combine the collector and storage tank in one box. The box has insulated sides, a clear cover, and one or more tanks inside. In some cases, large tubes are used instead of tanks. A batch water heater can typically store 30 to 60 gallons of hot water.

On a sunny day, sunlight travels through the glazing of the batch unit and strikes the tanks, which are flat black in color. In most cases, the tanks are covered with a special selective surface coating that readily absorbs sunlight, but reduces heat loss from the tank. When the tanks absorb the sun's energy, the water inside heats up. Local water pressure pushes the solar-heated water into the regular water heater whenever a fixture or appliance, such as a shower or dishwasher, is drawing hot water.

Batch heaters are manufactured and sold commercially. Prices range from about $800 to $1,200. However, because of the simplicity of the design, some people build their own.

The collectors for any type of solar water heater should be located as close as possible to the water heater tank to minimize the connecting piping. The glazing should face within 45 degrees of due south.

Collectors are usually located on the roof, but they can be attached to supports on the side of a house or on the ground. Because batch water heaters combine collectors, storage tanks, and water, they are heavy. Adequate structural support must be provided when they are located on the roof.

Water inside the tanks of a batch water heater will only freeze on bitterly cold nights. However, the water in the pipes that connect the batch heater to the inside can freeze at temperatures around 32°F. A special *freeze prevention drip valve* should be used on a batch water heater.

Solar water heating can provide year round savings. Households that use a large amount of hot water and can adapt the time when hot water is used to match when it is available will benefit the most. Savings will be greatest if laundry, dishes, and bathing are done between noon and early evening — after the sun has heated the water stored in the tank.

Figure 9-5
Batch Solar Water Heating System

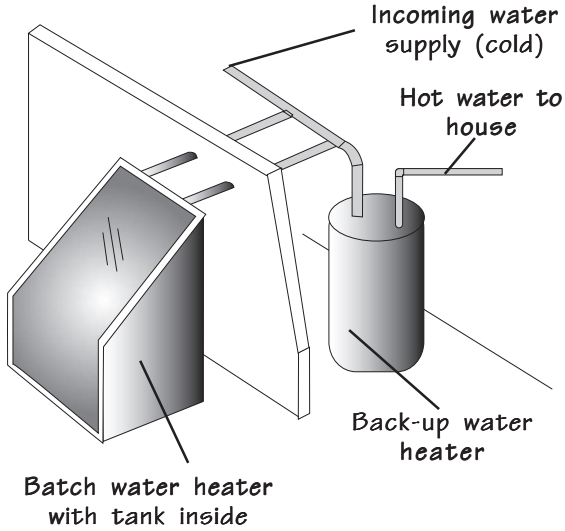

Instantaneous Water Heaters

Instantaneous water heaters use higher capacity electric coils or gas burners to heat cold water only when there is a need for hot water. They save energy in two ways: they have no storage tank so there is no need to keep stored water continuously warm, and gas-fired burners on these units usually heat water more efficiently than gas tank-type water heaters. Conventional water heaters keep 30 to 50 gallons of water at a constant temperature — 24 hours a day.

Instantaneous units must be sized carefully for their planned use. A small unit may provide heating for only one faucet or appliance at a time, so a higher capacity model or several units are generally needed to provide hot water for conventional residential uses. By eliminat-

Figure 9-6
Instantaneous Water Heater

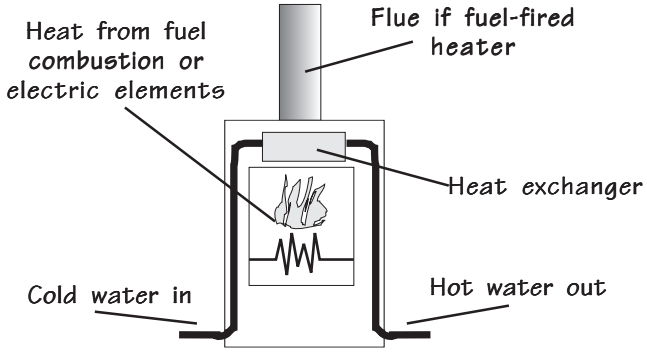

ing the standby losses and increasing efficiency, instantaneous water heaters may save 10 to 20 percent of a household's usual water heating bill.

The units range in cost from $250 to $800. In general, instantaneous water heaters are not particularly cost-effective investments. It is usually more economical to use conservation measures such as low-flow showerheads, insulated tank jackets, reduced thermostat settings to lower standby losses, and to install conventional, high efficiency water heaters.

Energy Efficient Appliances

Heating, cooling, and hot water are usually the biggest portion of energy needs in Louisiana homes. However, the cost of operating major appliances is significant. In the average home, energy bills range from $200 to $400 each year to run refrigerators and freezers, clothes washers and dryers, ranges and ovens, and other appliances.

While most new appliances offer a wide variety of features, many models are not designed to be energy efficient. When choosing appliances, it is important to consider their operating costs — how much energy they require to run — as well as the purchase price and the various features and conveniences they offer.

Appliances which operate efficiently may cost more to buy, but the energy savings they provide make them a good investment. For example, running a standard refrigerator over its life of 15 to 20 years costs about three times as much as its purchase price. An energy efficient model can save hundreds of dollars over the life of the appliance. Table 9-2 shows typical annual energy costs for a variety of appliances.

In addition to saving money on operating costs, energy efficient appliances give off less waste heat than standard models. Therefore, they help keep rooms inside the house cooler during warm weather.

The National Appliance Energy Conservation Act (NAECA), which upgraded the efficiencies of heating, cooling, and hot water systems, also required improvements in appliance efficiencies. The last round of refrigerator standards took effect in January 1, 1993. As a result, a typical refrigerator of today uses less than 800 kilowatt-hours (Kwh) per year — less than half of that for a typical 1973 model.

Table 9-2
Typical Energy Costs for Appliances*

Appliance	Average Model ($/yr)	High Efficiency Model ($/yr)	10-Year Savings
Refrigerator (manual defrost)	56	36	$200
Refrigerator/freezer (frost free)	96	56	400
Freezer (frost free)	108	60	480
Electric range	48	40	80
Gas range	36	28	80
Electric clothes dryer	56	44	120
Gas clothes dryer	24	20	40
Dishwasher**	56	36	200
Color Television	20	8	120
Lighting	60	28	320

*Adapted from "Saving Energy and Money with Home Appliances," by the Massachusetts Audubon Society and the American Council for an Energy Efficient Economy.

**Includes cost of water heating.

Figure 9-7
EnergyGuide Label

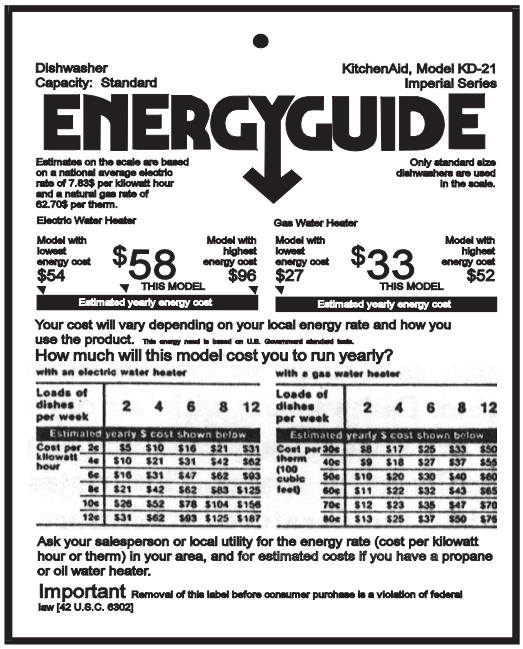
Dishwasher
Capacity: Standard

KitchenAid, Model KD-21
Imperial Series

ENERGYGUIDE

Estimates on the scale are based on a national average electric rate of 7.83$ per kilowatt hour and a natural gas rate of 62.70$ per therm.

Only standard size dishwashers are used in the scale.

Electric Water Heater

Model with lowest energy cost $54

$58 THIS MODEL

Model with highest energy cost $96

Estimated yearly energy cost

Gas Water Heater

Model with lowest energy cost $27

$33 THIS MODEL

Model with highest energy cost $52

Estimated yearly energy cost

Your cost will vary depending on your local energy rate and how you use the product. This energy need is based on U.S. Government standard tests.

How much will this model cost you to run yearly?

with an electric water heater

Loads of dishes per week		2	4	6	8	12
Estimated yearly $ cost shown below						
Cost per kilowatt hour	2c	$5	$10	$16	$21	$31
	4c	$10	$21	$31	$42	$62
	6c	$16	$31	$47	$62	$93
	8c	$21	$42	$62	$83	$125
	10c	$26	$52	$78	$104	$156
	12c	$31	$62	$93	$125	$187

with a gas water heater

Loads of dishes per week		2	4	6	8	12
Estimated yearly $ cost shown below						
Cost per therm (100 cubic feet)	30c	$8	$17	$25	$33	$50
	40c	$9	$18	$27	$37	$55
	50c	$10	$20	$30	$40	$60
	60c	$11	$22	$32	$43	$65
	70c	$12	$23	$35	$47	$70
	80c	$13	$25	$37	$50	$75

Ask your salesperson or local utility for the energy rate (cost per kilowatt hour or therm) in your area, and for estimated costs if you have a propane or oil water heater.

Important Removal of this label before consumer purchase is a violation of federal law [42 U.S.C. 6302]

ENERGYGUIDE LABEL

To compare the energy usage of an appliance, use the *EnergyGuide label*. Federal law requires that manufacturers display this label on all new refrigerators, freezers, water heaters, dishwashers, clothes washers, and room air conditioners. Energy Guide labels are not currently required on kitchen ranges, microwave ovens, clothes dryers, demand-type water heaters, and portable space heaters.

The large number on the Energy Guide label tells how much that appliance will cost to operate each year based on an estimate of the amount of energy used and an average national energy costs. The rating for a particular model is shown on a line scale that compares its energy cost against the model with the lowest and highest annual energy costs. Much like the federal miles per gallon ratings for automobiles, the actual amount of energy used and its cost will vary according to local prices and each family's lifestyle.

The Energy Guide label also provides the name of the manufacturer, model number, type of appliance, and capacity. It has a yearly cost table that shows a range of energy rates and the total annual cost to operate that particular appliance at each rate. Use exact energy rates from local utilities to estimate operating costs for the appliance.

APPLIANCE SHOPPING CHECKLIST

All Appliances

- ❒ Use EnergyGuide Tag to help select unit. Find the savings in operating costs for more efficient appliances. Divide the savings per year into the extra purchase price to get the payback period. Paybacks of less than five years are generally attractive.

Refrigerators

- ❒ The most efficient models are in the 16 to 20-cubic foot range.
- ❒ Side-by-side refrigerator/freezers use more energy than similarly sized models with freezers on top.
- ❒ Features such as automatic icemakers and through-the-door dispensers add somewhat to energy use.
- ❒ Units that are more square, rather than rectangular, also save energy, but may not be as convenient to use.
- ❒ Manual defrost units save considerably more than frost-free units, but create more work for the homeowner.
- ❒ Look for a power-saving switch that turns off a condensation-prevention heater. Keep this switch off unless the unit experiences significant condensation.
- ❒ A new generation of refrigerators that do not use chlorofluorocarbons (CFCs) exceed the minimum standards of NAECA by about 30% — the result of the electric utility-funded Super Efficient Refrigerator Program (SERP).
- ❒ Try to install the refrigerator in a cooler location — in particular, it should not receive direct sunlight.
- ❒ The refrigerator should operate between 36°F and 38°F, and the freezer should be 0°F to 5°F. Adjust temperatures to this range.

Dishwashers

- ❒ Water heating accounts for about 80% of energy use.
- ❒ Models that use less water need less energy — older units used 8 to 14 gallons per wash cycle compared to the mid-1994 range of 7 to 10 gallons.
- ❒ Should have light, medium, and heavy cycle options — water use for one dishwasher is 7.5 gallons for a light cycle, 11 gallons for medium, and 13 gallons for heavy.
- ❒ Should have an energy saving "air dry" or "no-heat dry" switch.
- ❒ Choose a unit that contains a supplemental or booster water heater; then set your water heater to 120°F. Make certain the unit still provides 160°F to the sanitary cycle if desired.

- ❒ Minimize pre-rinsing of dishes unless necessary; always rinse in cold water.
- ❒ Wash only full loads.

Clothes Washing Machines

- ❒ Choose a machine that offers several wash and rinse cycles and several sizes of loads.
- ❒ Front-loading models feature faster spin cycles, which dry clothes better, and use less water than top-loading models; in addition, front-loading models usually get clothes cleaner.

Clothes Dryers

- ❒ Energy-saving switches and models that detect "dryness" and shut off automatically offer considerable energy savings.
  - ❍ Some units have moisture sensors in the drum, which save about 15% over standard dryers.
  - ❍ Others have a temperature sensor in the dryer exhaust, which saves about 10% over standard units.
- ❒ If clothes that usually need ironing are removed while slightly damp, they can be hung up to save on dryer and ironing energy use.

Cooking

- ❒ Convection ovens are about 1/3 more efficient than standard ovens.
- ❒ Electric cooktops with ceramic glass covers are more efficient than coil or disk electric stoves; induction elements, which use electromagnetic energy to heat the pan, are the most efficient.
- ❒ Avoid large kitchen exhaust fans, especially those for side-vented stoves, which can exhaust 400 to 700 cfm. They can create considerable negative pressures in tight homes and may cause backdrafting of combustion appliances. The code only requires 100 cfm of ventilation. If using large, side-vented units, make certain to supply make-up air to the unit from outside.

LIGHTING

Standard incandescent bulbs are the most common lighting source for homes. However, incandescent lamps are quite inefficient. They convert only 10 percent of the electricity to lighting; the remainder is waste heat. The lighting industry has responded to the need for energy efficiency with a wide range of excellent products. The most notable of these options are:

1. Compact fluorescents that use thin tubes and require only 5 to 29 watts of electricity to provide as much light as standard incandescent lamps. These products can also provide the same quality of light as incandescent lamps.

2. Lower wattage fluorescent tubes, along with efficient electronic ballasts, can reduce the energy needed by a standard 2-lamp, 4-foot fixture from 92 watts to about 60 watts. There are many products available with a high color rendition index (CRI), which measures the ability of a lamp to illuminate colors accurately.

3. High pressure sodium and metal halide lamps, mainly intended for exterior use in residences, are four to six times more efficient than standard exterior lamps.

There is great opportunity for originality and ingenuity in residential lighting design. A home combines more functions and needs than most other buildings, yet energy efficient lighting can be achieved at minimal cost. Of course, the needs of each home must be considered individually, but certain conservation measures are applicable to all home designs, including:

- ❒ Energy efficient fixtures and lamps for areas of high continuous lighting use, such as the kitchen, sitting areas, and outside the home for safety and security.
- ❒ Local task lighting for specific activities such as working at a desk, on a kitchen counter, or in a workshop.
- ❒ Accent lighting for areas that need more light enables the overall level of lighting in a room to be reduced.

Figure 9-8
Energy Efficiencies of Lights
(Lumens per Watt)

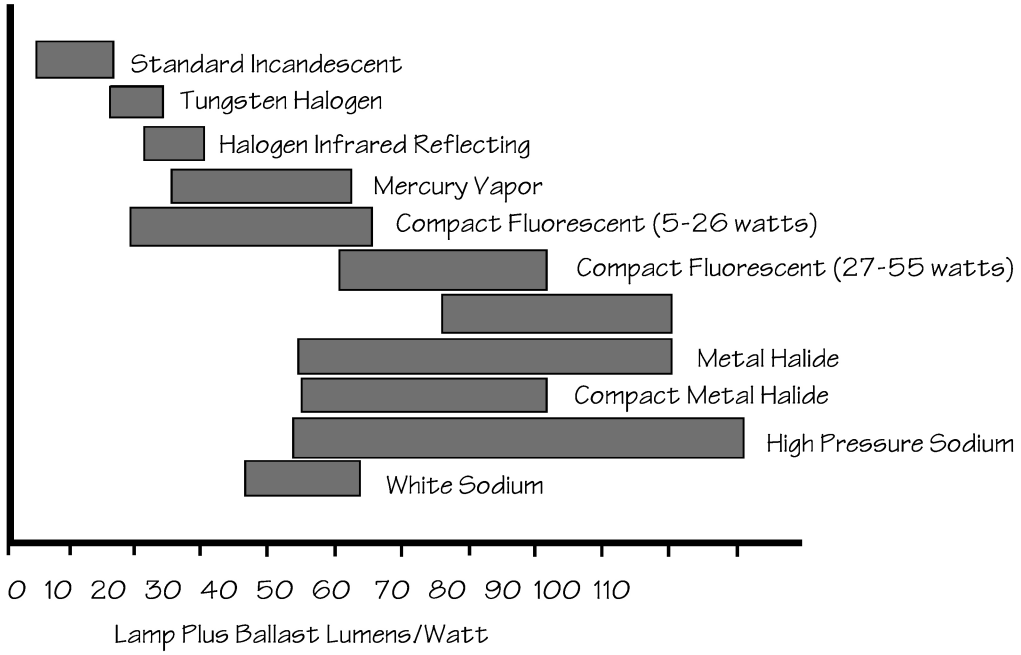

- ❒ Timers and light-sensitive switches for exterior lighting.
- ❒ Daylighting — using sunlight as the light source in areas normally occupied during the day.
- ❒ Solid-state dimmers and multilevel switches which allow variable lighting levels.

The amount of light a lamp provides is measured in *lumens*. The electrical energy used to provide that light is measured in watts. The lighting level depends upon the efficiency of the light source in converting watts to lumens and the ability of the lighting fixture to distribute the light effectively. High efficiency lamps and lighting fixtures reduce wattage requirements but still provide desired lighting levels.

The efficiency — called the *efficacy* — of a lamp is measured in lumens of light produced per watt of electricity consumed. Fig. 9-8 provides comparative efficacies of different lamp types.

In designing a lighting plan, consult with knowledgeable professionals about optimum lighting levels and different types of fixtures and lamps. Table 9-3 shows sizing guidelines for fluorescent lighting systems.

When choosing lighting fixtures, consider the long term energy costs of the fixture as well as the purchase price. Energy efficient lighting alternatives reduce waste heat in summer, thereby saving money on cooling costs and increasing comfort levels. In addition, they typically last 9 to 10 times longer than standard incandescent lamps.

Table 9-3
Fluorescent Lighting Guidelines
(using T-8 lamps and electronic ballasts)

Type of Room	Size of Room	Amount of Light Needed (Watts)
Living room,	under 150 sq ft	40 to 60
bedrooms, family,	150 to 250 sq ft	60 to 80
or recreation room	over 250 sq ft	.33 watt/sq ft
Kitchen,	75 sq ft	55 to 70
laundry, or	75 to 120 sq ft	60 to 80
workshop	over 120 sq ft	.75 watt/sq ft

Table 9-4 shows a sample lighting comparison between a home with standard, incandescent lighting and a home with a variety of efficient lighting technologies. The energy efficient design costs an extra $210, but saves $160 per year on lighting energy bills. The added investment pays back in 1.3 years and achieves a 60% return on investment.

Table 9-5 shows the purchase and operating costs of a number of lighting options. The different alternatives are grouped by lumen output so lamps for similar uses can be compared. The total cost is determined for a period of 9,000 hours, which is the typical life of a compact fluorescent lamp.

For example, a standard 75-watt incandescent lamp costs $54 for electricity and bulb replacements over 9,000 hours of operation. Compare that to a new, compact fluorescent lamp, which lasts 10,000 hours compared to 1,000 for the incandescent, and costs only $30 to purchase and operate.

Table 9-4
Sample Improved Lighting Design for Homes

	Standard Lighting Design				Energy Efficient Design			
Room	Type*	Watts	Hours/ day	Kwh/ year	Extra Cost ($)	Type	Watts	Kwh/ year
Kitchen	I	150	8	438	30	F	60	175
Living	I	150	6	328	5	H	135	296
Dining (decorative) **	I	75	5	137	-	I	75	137
Bathrooms (2) **	I	200	4	292	-	I	200	292
Hallway	I	150	10	545	30	F	60	219
Bedrooms (3)	I	225	4	328	30	F	66	96
Laundry/ Utility	I	100	4	146	25	F	30	88
Closets (5)	I	300	1	110	-	I	300	110
Porch	I	100	12	438	15	F	60	131
Exterior Floodlight	I	360	12	1,577	100	HPS	150	657
Total Annual Electricity Use (Kwh)				4,339				2,201
Annual Lighting Cost ($ @ $.075/Kwh)				325				165
Estimated Extra Cost for Energy Efficient Lighting					$210			
Payback Period					1.3 years			
Rate of Return on Investment					60%			

* I=incandescent; F=fluorescent; H=halogen; HPS=high-pressure sodium

** Compact or tubular fluorescent fixtures could also be used in these rooms.

Table 9-5
Purchase and Operating Costs of Different Lighting Products
(recommendations in italics)

	Wattage	Typical Purchase Cost ($)	Lumens	Rated Life (Hours)	Efficacy (Lumens/ Watt)	Electricity Cost for 9,000 hours ($)
Incandescent and Fluorescent (cost is for bulb only)						
Standard	60	0.77	870	1,000	15	40
Energy saving (Halogen)	52	0.79	800	1,000	15	35
Compact fluorescent	*15*	*10.00*	*720*	*9,000*	*48*	*12*
Standard	75	0.77	1,210	1,000	16	51
Energy saving (Halogen)	67	0.79	1,130	1,000	17	45
Compact fluorescent	*18*	*12.00*	*1,100*	*10,000*	*61*	*14*
Compact fluorescent	*20*	*14.00*	*1,200*	*10,000*	*60*	*16*
Standard	100	0.77	1,750	750	17	67
Energy saving (Halogen)	90	0.79	1,620	750	18	61
Compact fluorescent	23-27	20-25	Comparable	10,000	64	20
Tungsten-Halogen (cost is for bulb only)						
Small lamp	42	2.52	665	3,500	16	28
Medium-sized lamp	72	2.52	1,300	3,500	18	49
Room Lighting (cost is for bulb & ballast)						
Incandescent fixture with three, 60-watt lamps	180	30	2,610	1,000	15	121
Fluorescent fixture with two 32-watt lamps/electronic ballast	*54*	*42*	*5,500*	*20,000*	*102*	*41*
Three compact fluorescent fixtures -- 24-watts each	*66*	*90*	*4,000*	*10,000*	*102*	*53*
Exterior Fixtures (assuming 4 outdoor fixtures -- cost is for fixture and bulbs)						
Standard PAR lamp (2 lamps/ fixture)	960 for 4 fixtures	60	20,880	2,000	12	648
Tungsten-halogen (2 lamps/ fixture)	720 for 4 fixtures	70	21,600	2,000	20	486
Mercury Vapor (1 lamp/ fixture)	400 for 4 fixtures	120	23,000	24,000	57	270
Metal Halide (1 lamp/ fixture)	250 for 4 fixtures	300	20,500	10,000	82	170
High Pressure Sodium (1 lamp/ fixture)	*200 for 4 fixtures*	*300*	*22,000*	*24,000*	*110*	*135*

Notes:

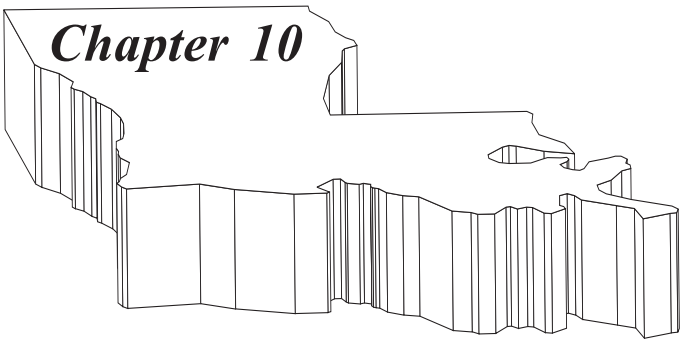

Passive Solar Homes — Designs for Today

Passive solar homes capture both the beauty of the outside world and the heat coming in from the sun. They are designed with the local climate in mind — to use temperature, humidity, wind, and solar radiation to determine the site, orientation, floor plan, and overall building layout and materials. The key features of passive solar homes are:

- ❒ **Energy conservation measures** — energy efficiency is always the first step in designing a passive solar home. For guidance, use details from a comprehensive energy package as described in Chapter 2.
- ❒ **Glass concentrated on the south** — south windows let sunlight into the building in winter and can be shaded effectively in summer. Double paned low-e windows will reduce heat loss at night and heat gain in summer.
- ❒ **Thermal storage mass** — tile-covered slab floors, masonry walls, and water-filled containers store solar heat and save energy all year.
- ❒ **Window shading** — overhangs, blinds, shade screens, curtains, and landscaping shade unwanted sunlight in summer.
- ❒ **Ventilation** — natural breezes, ceiling fans, whole house fans, and space fans can provide comfort during warmer weather.

Current trends in housing, such as expansive glass areas, daylighting, sunrooms, great rooms, tile floors, fireplaces, and open floor plans, fit well into passive solar designs. Effective designs will reduce heating and cooling bills and provide greater comfort.

Basic Design Guidelines

A cardinal rule in passive solar design is to set one's sights properly — don't expect more than the sun can deliver. The Southeastern climate has cool, relatively cloudy winters and hot, humid, relatively sunny summers. Many well-designed passive solar homes in Louisiana provide their owners with low energy bills and year-round comfort, as well as natural daylight and visual connection with the outdoors. However, poorly designed passive solar homes may actually have uncomfortable temperature swings both in summer and in winter.

Whether incorporating passive solar features in a new home by adapting a conventional home plan or designing an entirely new plan, consider the following design ideas: Rooms with large expanses of glass should include thermal storage mass.

- ❒ **Day-use rooms** — Breakfast rooms, sunrooms, and playrooms work well on the south side of the house. They should adjoin rooms that are used frequently to take full advantage of solar heating.
- ❒ **Frequently-used rooms** (morning to bedtime) — Family rooms, kitchens, dens, and dining rooms work well on the south side. Be conscious of potential problems with glare from sunlight through large expanses of windows.
- ❒ **Sunspaces** — Passive solar rooms can be isolated from the house. In winter, the doors or windows between the house and the sunspace

Figure 10-1
Passive Solar Room Planning

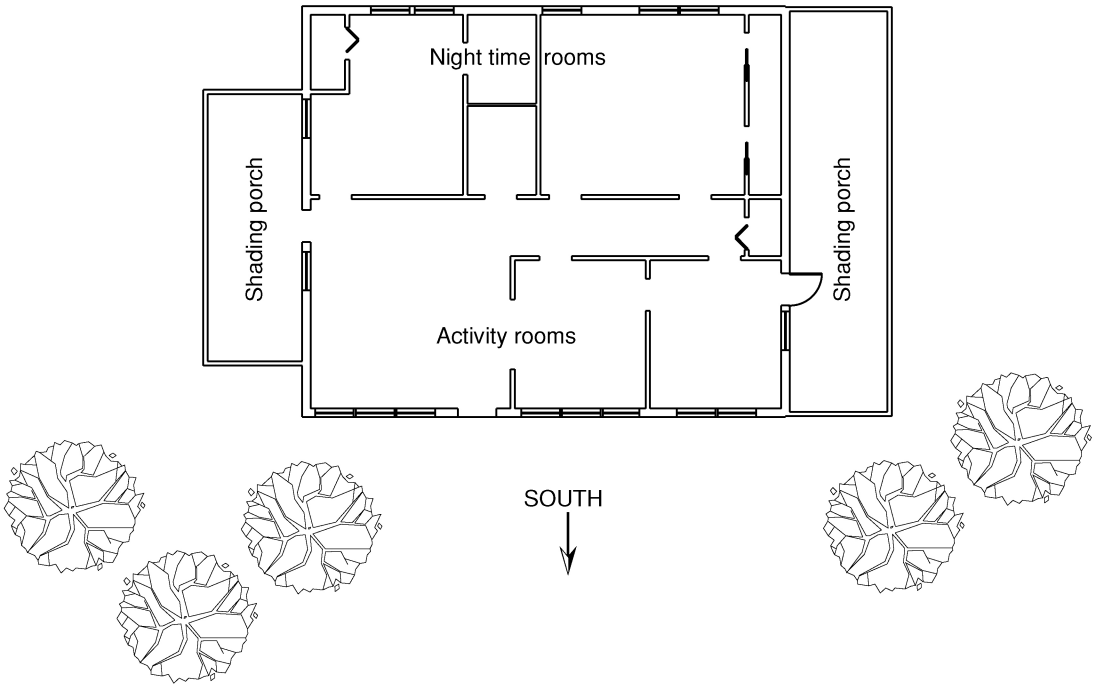

can be opened to let solar heat move into the home. At night, the doors can be closed, and the sunspace buffers the home against the cold night air. In summer, sunspaces protect the home from outside heat gain — for best performance, they should not be air conditioned.

- ❒ **Privacy rooms** — Bathrooms and dressing rooms can be connected to solar-heated areas, but are not usually located on the south side since large windows are not desirable.
- ❒ **Night-use rooms** — Bedrooms are usually best on the north side, unless used often during the day (such as a study or children's bedroom). It is often difficult to fit thermal storage mass into bedrooms, and privacy needs may limit opportunities for installing large glass areas. However, some household members may prefer bedrooms filled with natural light which can use passive solar features effectively.
- ❒ **Seldom-used rooms** — Formal living rooms, dining rooms, and extra bedrooms are best on the north — out of the traffic pattern and air flow.
- ❒ **Buffer rooms** — Unheated spaces, such as closets, laundries, workshops, pantries, and garages, work best against the north, east, or west exterior walls to protect the conditioned space from outside temperature extremes.
- ❒ **Exterior covered areas** — Porches and carports on the east and west provide summer shading. However, west-facing porches may be uncomfortable in the afternoon. Avoid porches on the south side, as they shade winter sunlight. South-facing decks on a second floor often shade windows on the first floor; they should only be three to four-feet wide to allow winter sunlight access to the windows below.

PASSIVE SOLAR COMPONENTS

The most successful passive solar homes are simple. They combine energy conservation features, direct gain windows and sunspaces, adequate thermal storage mass in direct sunlight, open floor plans to promote natural convection of solar heat throughout the house, and effective natural cooling techniques. Although the design elements are basic, the specifications for each component are critical. Too much south-facing glazing, inadequate thermal mass, an unbalanced floor plan, and lack of shading and ventilation can create an energy loser — not a winner. The following guidelines should help ensure that your home design provides year-round comfort as well as low energy bills.

Passive Solar Windows

At a minimum, passive solar windows should be double-glazed and face within 20 degrees of due south. Avoid roof glass or skylights, as well as east and west windows, which cause overheating in summer and suffer heat loss at night during the winter. North windows are helpful for ventilation, daylight, aesthetics, and code requirements for emergency exits.

Low-emissivity windows will improve the performance of passive solar homes. They screen a small amount of sunlight during the day, but reduce nighttime heat loss and improve comfort. If a home has large areas of south glass, but little thermal storage mass, low-e glazing is highly recommended to help moderate temperature extremes. The savings provided by low-e glass can be as great in summer as in winter, depending on the window design and the home's location.

Proper design

The best passive solar homes combine energy conservation features, passive solar heating, and natural cooling. Table 10-1 shows examples of different combinations. Note that just adding more glass on the south side of a home, even with added mass, may not reduce annual energy bills due to higher summer cooling demands from the increased south window area.

Table 10-2 shows the savings from passive solar sunspaces, which serve as practical, aesthetic buffers between outside temperature extremes and the interior rooms. In winter, the heat generated in a sunspace from incoming sunlight can significantly reduce heating bills.

Figure 10-2
Basic Passive Solar Designs

Direct Gain

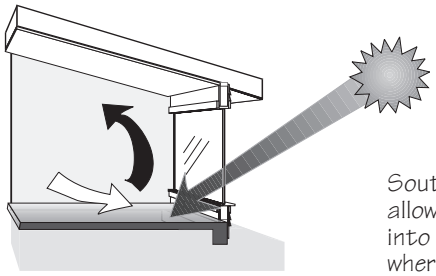

South-facing windows allow sunlight directly into the living area where thermal storage mass captures the sun's energy.

Passive Solar Sunspace

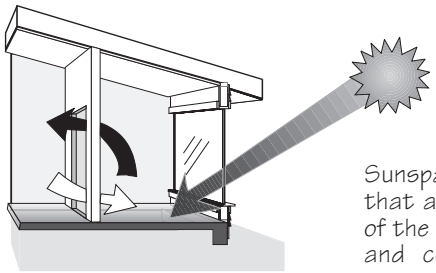

Sunspaces — rooms that are independent of the home's heating and cooling system capture the sun's energy and transfer the heat generated to the house.

Thermal Storage Wall

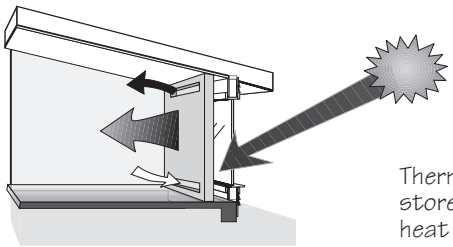

Thermal storage walls store incoming solar heat and let it radiate into the living area.

Solar Air Collector

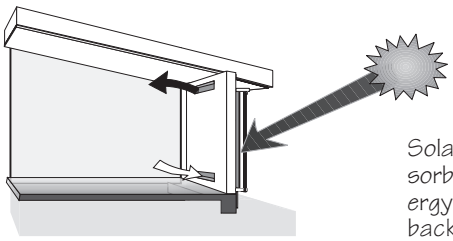

Solar air collectors absorb incoming solar energy, vent through the back of the air collector and transfer solar-heated air into the house.

Thermal Storage Mass

Thermal storage mass improves the energy performance of a home throughout the year by keeping interior temperatures from fluctuating greatly. While it may sound complicated, thermal storage mass is composed of heavy materials in a home, such as tile-covered slab floors or interior walls made of brick, concrete, or stone. The presence of thermal mass distinguishes a passive solar home from a sun-tempered design, which has moderate amounts of south-facing glass but lightweight wood framing and furnishings, such as carpet, instead of significant mass.

Problems without thermal storage mass

A home with large expanses of south-facing windows and little thermal mass has problems such as:

- ❒ Uncomfortably warm on sunny winter days when sunlight enters the home and heats the lightweight materials, which cannot store much of the heat.
- ❒ Uncomfortably cool on winter nights because minimal heat has been stored and the expansive windows lose substantial heat.
- ❒ High midday temperatures in summer; thermal storage mass helps to reduce peak interior temperatures during hot weather outside.
- ❒ Higher heating and cooling bills than comparable homes without as much glass area.

Properly designed passive solar homes should not overheat significantly during the day, and the heat they store helps to maintain temperatures above 60°F on

Table 10–1 Energy Bills in Direct Gain Homes*

	Area (sq. ft.)		R–Values				Annual Energy Bills ($/yr)		
	South Glass	Exposed Concrete Slab	Ceiling	Wall	Floor	Windows	Heating	Cooling	Total
Double-glazed Windows									
Base Home	75	0	30	15	13	1.8	212	231	443
Example 1	180	720	30	15	13	1.8	147	192	339
Example 2	270	1,080	30	15	13	1.8	127	210	337
Example 3	360	1,440	30	15	13	1.8	108	229	337
Low-e Windows									
Base Home	75	0	30	15	13	3.3**	165	210	375
Example 1	180	720	30	15	13	3.3**	114	176	290
Example 2	270	1,080	30	15	13	3.3**	99	185	284
Example 3	360	1,440	30	15	13	3.3**	84	194	278

Table 10-2 Energy Bills in Homes with Sunspaces*

With Sunspace, Low-e Windows									
Example 1	180	720	30	15	13	3.3**	157	114	271
Example 2	270	1,080	30	15	13	3.3**	141	125	266
Example 3	360	1,440	30	15	13	3.3**	127	137	264
With Sunspace, Better House Insulation									
Example 1	180	720	38	22	19	3.3***	80	112	192
Example 2	270	1,080	38	22	19	3.3***	55	123	178
Example 3	360	1,440	38	22	19	3.3***	39	136	175

* For an 2000 square-foot home in Baton Rouge modeled using Energy 10.
** Low-e glass on south windows only; others have double glazing.
*** Low-e glass on all windows.

Figure 10-3
Spread Out Thermal Mass Surface

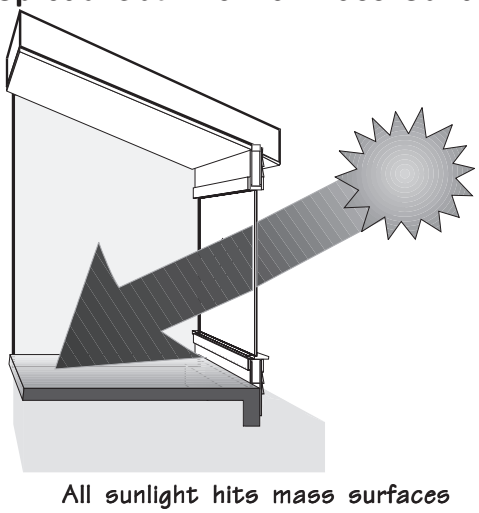

Figure 10-4
Use Floor Coverings Wisely

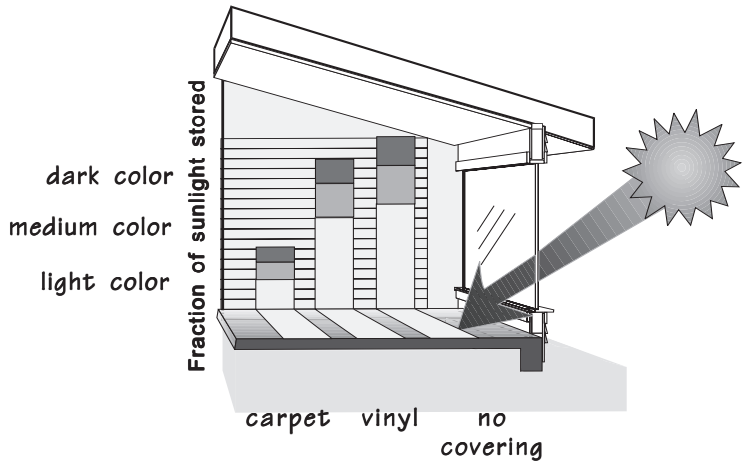

most winter nights. One misconception about passive solar homes is that they retain high temperatures (above 68°F) for long periods of time. On nights when outside temperatures drop below 40°F, passive homes may drop below 65°F and need backup heating. However, they will require less heating than a conventional home.

Providing adequate thermal mass is usually the greatest challenge to the passive solar designer. The amount of mass needed is determined by the area of south-facing glazing and the location of the mass. Follow these guidelines to ensure an effective design.

Guideline 1: Locate the thermal mass in direct sunlight

Thermal mass installed where the sun can reach it directly is more effective than indirect mass placed where the sun's rays do not penetrate. Houses that rely on indirect storage need three to four times more thermal mass than those using direct storage.

Guideline 2: Distribute the thermal mass

Passive solar homes work better if the thermal mass is relatively thin and spread over a wide area. The surface area of the thermal mass should be at least 3 times, and preferably 6 times, greater than the area of the south windows. Slab floors that are 3 to 4 inches thick are more cost effective and work better than floors 6 to 12 inches thick.

Guideline 3: Do not cover the thermal mass

Figure 10-4 shows the effect of various floor coverings on the performance of passive solar homes with slab floors. Carpeting virtually eliminates savings from the passive solar elements. Masonry walls can have drywall finishes, but should not be covered by large wall hangings or lightweight paneling. The drywall should be attached directly to the mass wall, not to purlins fastened to the wall that create an undesirable insulating airspace between the drywall and the mass.

Guideline 4: Select an appropriate mass color

For best performance, finish mass floors with a dark color. Medium colors, which store 70% as much solar heat as dark colors, are appropriate in many designs. A matte finish for the floor will reduce reflected sunlight, thus increasing the amount of heat captured by the mass and reducing glare. The color of interior mass walls has little effect on passive solar performance.

Guideline 5: Insulate the thermal mass surfaces on the outside

Chapter 5 shows techniques for insulating slab floors and masonry exterior walls and discusses nagging problems with termites boring through foam insulation. Although thermal mass such as slabs and exterior walls should be insulated to the outside, recent code changes do not allow foam insulation in ground contact. Thus, an insulated in-fill slab may be preferable (Figure 5-3).

Guideline 6: Make thermal mass multipurpose.

To ensure their cost effectiveness, thermal mass elements should serve other purposes as well. Masonry thermal storage walls, which have a wall of glass with a wall of concrete directly inside, are one example of a passive solar design that is often cost prohibitive because the mass wall is only needed as thermal mass. On the other hand, tile-covered slab floors store heat, serve as structural elements, and provide a finished floor surface. Masonry interior walls provide structural support, divide rooms, and store heat.

Thermal Mass Patterns

Table 10-3 shows how the amount of thermal mass directly affects the savings produced by a passive solar home. Note that energy bills for a direct gain home with no thermal mass are higher than a comparable energy efficient home with standard glass areas. Adding more thermal mass than is recommended increases energy savings but is often not cost effective.

Thermal mass can be incorporated into a passive solar room in many ways, from tile-covered floors to water-filled drums. When selecting thermal mass materials, consider the aesthetics, costs, and energy performance. Design options for thermal mass include:

- ❒ **Slab-on-grade floors** — used in most passive solar homes. Slab floors can be finished with tile, stone, or brick, can be stained, or can be scored into a tile-like pattern. Mass floors can be expensive to install on upper stories. Floors made of brick, brick pavers, or thick tile may also be used.
- ❒ **Exterior mass walls** — walls composed of solid concrete, brick or stone and located on exterior walls. They must be exposed on the inside to sunlight and indoor air and insulated on the outside. They should not be covered with materials such as wood paneling or fabric that will block the flow of heat between the wall and the room. A mass wall can be covered with drywall if it is bonded directly to the masonry surface without creating an airspace.
- ❒ **Interior mass walls** — solid mass walls between interior rooms. Since they have living area on both sides, they can be up to 12 inches thick, although thinner 4- to 8-inch walls deliver heat to rooms adjacent to the passive solar areas more quickly. Masonry fireplaces that are several feet thick store heat but are not as effective as thinner mass walls with greater surface area. Since masonry is not a good insulator, keep fireplaces on interior walls.
- ❒ **Water-filled containers** — water stores heat twice as effectively as masonry on a volume basis and five times as effectively on a weight basis. However, water containers look unusual in most living areas. Since water stores more heat per pound than masonry, water-filled

Table 10-3
Heating Bills as a Function of Thermal Mass*

Amount of Thermal Mass	Heating Energy Demand (Million Btu/yr)	Energy Savings ($/yr)	30-Year Discounted Savings ($)**
Passive solar house with:			
No thermal storage mass	44.3	0	0
1/4 recommended mass	31.5	128	2,300
1/2 recommended mass	29.2	151	2,720
Recommended mass	28.0	163	2,935
1-1/2 recommended mass	24.5	198	3,565

*For a 2,000 square-foot energy efficient home with 270 square feet of south-facing windows.
**The 30-year discounted energy savings is the sum of the savings for each year discounted to the present at an 8% annual rate.

Figure 10-5
Thermal Mass Patterns

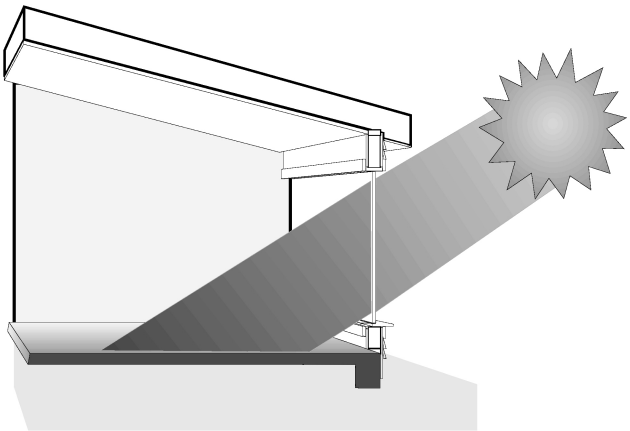

Direct gain — slab floor serves as thermal mass

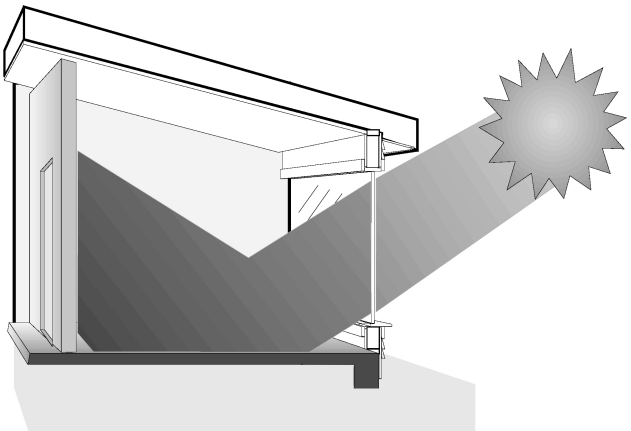

Direct gain — mass floor and rear masonry interior mass wall

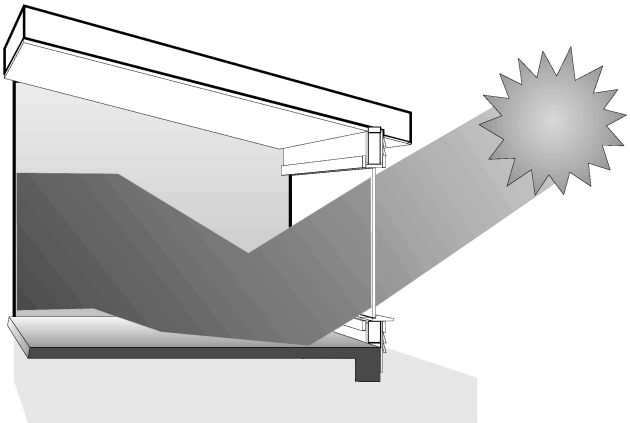

Direct gain — mass floor and masonry walls on sides of rooms

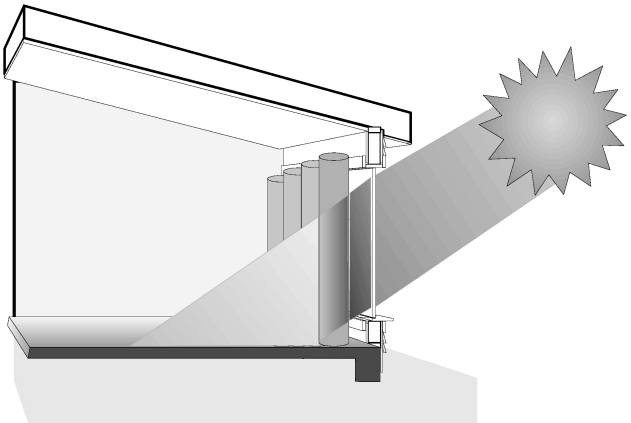

Water wall

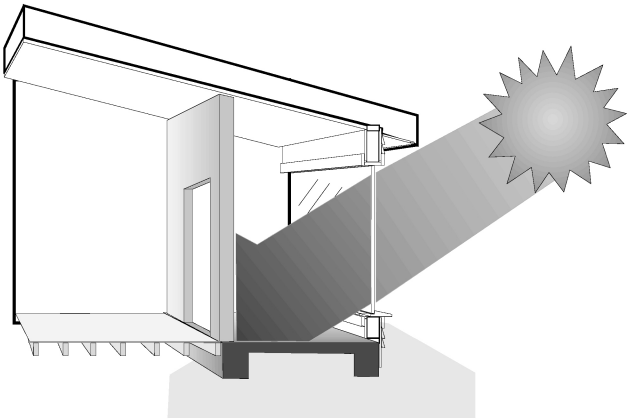

Sunspace — mass floor and wall

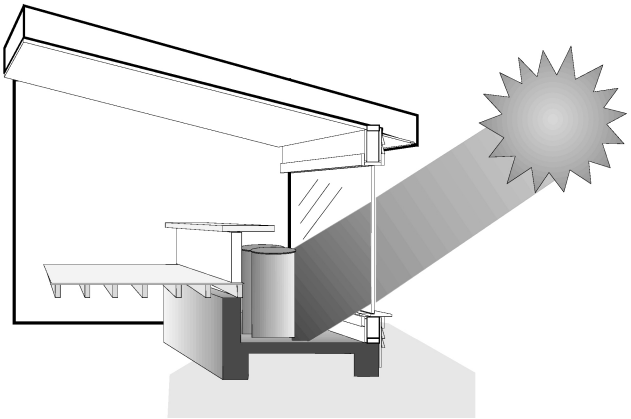

Direct gain sunspace (cannot be closed off from conditioned area) — mass floor and water thermal storage

containers weigh less and are easier to use in upstairs rooms. Commonly used water containers include fiberglass cylinders (containers 8-feet high by 1-foot in diameter hold 47 gallons) and 30- or 55-gallon metal drums. Metal containers should be treated with a rust inhibitor to extend their life.

- ❒ **Hot tubs, saunas, and indoor pools** — some homeowners have tried to use hot tubs, saunas, and indoor pools as thermal storage mass. These forms of water storage are too thick and deep for passive solar designs to heat effectively. Plus, the desired water temperature for comfortable use of these amenities is hotter than the passive solar contribution can possibly achieve. Indoor pools and tubs that are filled continuously generate high humidity, which can cause discomfort and mold growth.

- ❒ **Thermal storage walls** — a solid masonry wall fronted by exterior double-glazed windows. Sometimes known as Trombe' walls, these designs are one of the least cost-effective passive solar options. They are expensive to build, and many researchers question whether the mass wall has sufficient time to warm between the periodic spells of cloudy winter weather experienced in most of the Southeast.

Heat Distribution

It may be necessary to transfer solar-heated air from the south-facing rooms in a passive solar home to other rooms. Passive solar heating is simple in its operation. Any design to distribute the heat throughout the house should reflect this simplicity.

As air is warmed by the sun on the south side of the building, it rises, causing cooler air from the interior of the house to circulate to the south side — a process known as *natural convection*. Floor plans that have the south-facing rooms stepped down from the north side enhance convection. A stepped design also allows rooms on the south to be constructed with slab floors and rooms on the north to have framed floors.

Sunspace designs that have large glazing areas may generate sufficient heat to warrant a small blower or fan to transfer the heat into the rest of the house. A ceiling fan can be used at a low setting or a thermostatically controlled blower can be installed in the connecting wall. These forced ventilation measures may also improve heat distribution for direct gain designs. The key to moving air heated in a passive solar design is to move it slowly — fast-moving air at less than 90°F can make people feel uncomfortable.

Estimating Passive Solar Savings

When considering passive solar heating, don't forget the cooling season. Some passive solar homes in Louisiana have had overheating problems. Careful designs avoid overheating and often save on summer cooling bills. Chapter 6 on windows and doors describes shading and ventilation measures.

Always remember that the south window area is only one component of an effective passive solar design. Thermal storage mass and summer overheating protection are critical, as well.

The following rules of thumb approximate the annual heating energy savings of passive solar homes:

- ❒ Each square foot of double-glazed south-facing window that is unshaded in the winter will save 25,000 to 50,000 Btu per year on a home's heating bill, if sufficient thermal mass exists.

- ❒ Low-emissivity glass will increase the savings 15 to 30 percent.

Thus, an energy efficient home with 200 square feet of passive solar windows and sufficient thermal storage mass could save 5 to 10 million Btu of energy on home heating bills each year. Movable insulation or low-e glass would save an additional 1 to 3 million Btu.

The *Solar Savings Method* is a more accurate method for calculating the energy saved by passive solar design. The approach, developed by Los Alamos National Laboratory, calculates the Solar Savings Fraction based on the heating load of the house (a measure of its potential to lose heat in winter) and the passive solar glass area, given that the house has proper amounts of thermal storage mass.

Pages 155 and 156 show a simplified version of the Solar Savings Method which can provide a rough estimate of the savings on heating bills offered by passive solar designs. The cost of heating energy for the analysis comes from Table 10-6, which factors the cost of electricity and fuel with the efficiency of heating systems to derive a cost per million Btu for several different heating systems. The estimates require that

Table 10-4
South Window Area for Passive Solar Homes

Recommended areas expressed as percentage of floor area*

	Unshaded	Overhang	Awning or Solar Screen	Solar Screen and Low-e Glass
Direct gain	0-5	5-12	5-16	5-20
Sunspace	5-10	5-20	5-25**	5-30

*For example, a 2,000 square-foot home should not have more than 100 square feet (.05 x 2,000) of unshaded, direct gain glass. If the direct gain area is shaded with an awning or solar screen, then its area can be increased to 16 percent of the floor area.

**If the area of south-facing glazing for a sunspace will exceed 20 percent of the floor area of the home, then it should be isolated from the rest of the house and not be air conditioned.

a house have properly designed thermal storage mass and heat distribution. The home also should have natural cooling measures to prevent summer overheating.

The Passive Solar Handbook, Volume III, published by the U.S. Department of Energy has detailed information on this procedure. ***Passive Solar Design Strategies: Guidelines for Home Builders***, published by the Passive Solar Industries Council, has computational methods as well. The U.S. Department of Energy also has an energy simulation software package called ***Energy 10***, which has capability to model passive solar homes.

Summary

Because most of Louisiana enjoys mild, if not warm, winters, passive solar homes must stress the natural cooling measures contained in Chapter 11 more than passive solar heating measures. In the northern portion of the state, passive solar heating will be more effective because the winter weather is cooler and more savings are available. However, these areas still have hot summers, so the passive solar designs must be well balanced and make use of natural cooling measures.

To be most effective, passive solar designs should shift windows normally installed on east and west walls to the south. With the addition of an effective energy package, properly sized overhangs, and thermal storage mass, these "moderately" passive solar homes should perform well and deliver comfort throughout the year.

SOLAR SAVINGS ESTIMATOR

Step 1: Write the area of passive solar windows _____sq ft.

Step 2: Divide the area of the south-facing windows in Step 1 by the heated floor area of the house _____

Step 3: Using answer from Step 2, Locate the window multiplier in Table 10-5 _____MMBtu per yr /sq ft

Step 4: Multiply the window area by the multiplier (Step 1 answer x Step 3 answer) _____MMBtu/yr

Step 5: Find the delivered cost of energy for the heating system from Table 10-6 _____$/Btu

Step 6: Multiply the Step 4 savings by the energy cost in Step 5 to get annual heating savings $_____

For example, a 1,920-square foot, direct gain, passive solar house in Baton Rouge has 288 square feet of south glass, which is thus 15% (288/1,920) of the floor area. The house has a standard natural gas furnace (operating cost is the average of $7.69 and $12.82/MMBtu in Table 10-6). Estimated savings is:

Step 1: Passive solar window area = 288 sq ft

Step 2: South window area as a fraction of heated floor area = 0.15

Step 3: Windowmultiplier (from Table 10-5) = .031

Step 4: Annual energy savings = 8.93 MMBtu/yr

Step 5: Cost of delivered energy = $10.26/MMBtu

Step 6: Annual savings on heating = $92/year

Table 10–5
Passive Solar Window Energy Savings Multiplier — (MMBtu/year-square-foot)*

Baton Rouge

	South Window Area as a Fraction of Living Area							
Design Feature	**.050**	**.075**	**.100**	**.125**	**.150**	**.175**	**.200**	**.250**
Direct gain	.041	.037	.034	.033	.031	.029	.028	.025
Direct gain, low-e glazing	.048	.044	.042	.040	.038	.036	.035	.031
Sunspace	.047	.042	.040	.036	.034	.032	.030	.027
Sunspace, low-e glazing	.055	.050	.046	.042	.040	.037	.035	.031
Thermal storage wall	.049	.042	.038	.034	.032	.030	.028	.025

New Orleans

Design Feature	**.050**	**.075**	**.100**	**.125**	**.150**	**.175**	**.200**	**.250**
Direct gain	.048	.043	.041	.039	.036	.034	.032	.028
Direct gain, low-e glazing	.056	.052	.049	.046	.043	.041	.038	.034
Sunspace	.057	.050	.049	.048	.041	.036	.034	.030
Sunspace, low-e glazing	.063	.057	.052	.048	.044	.041	.038	.033
Thermal storage wall	.056	.048	.042	.039	.036	.034	.032	.028

Shreveport

Design Feature	**.050**	**.075**	**.100**	**.125**	**.150**	**.175**	**.200**	**.250**
Direct gain	.036	.030	.029	.027	.026	.024	.023	.022
Direct gain, low-e glazing	.042	.039	.037	.035	.034	.032	.031	.028
Sunspace	.041	.037	.034	.032	.030	.028	.026	.024
Sunspace, low-e glazing	.045	.043	.040	.038	.035	.033	.031	.028
Thermal storage wall	.042	.037	.032	.031	.029	.027	.025	.023

*These values were derived from charts in "Passive Solar Design Handbook, Volume 3: Passive Solar Design Analysis," edited by Robert Jones, published in July, 1982 by the U.S. Department of Energy as publication number DOE/CS-0127/3. The charts assume the house has full access to winter sunlight and contains properly designed thermal storage mass.

Table 10–6
Typical Delivered Cost of Energy for Baton Rouge*
(January, 2001)

Type of Fuel	Base Cost of Energy		Delivered Energy Cost ($/MMBtu)	
	($/unit)	($/MMBtu)	Standard ($)	High Efficiency ($)
Natural gas	0.60 - 1.00/ccf	6.00 - 10.00	7.69 - 12.82	6.67 - 11.11
Propane	1.20 - 1.50/gal	13.00 - 16.30	16.72 - 20.90	14.49 - 18.12
Fuel oil	0.95 - 1.20/gal	6.43 - 8.57	8.24 - 10.99	7.14 - 9.52
Elec. heat pump	.07 - .09/kwh	20.50 - 26.40	10.29 - 13.24	8.75 - 11.25
Elec. resistance furnace	.07 - .09/kwh	20.50 - 26.40	20.50 - 26.40	20.50 - 26.40

* Standard fuel-fired furnace efficiency: AFUE 0.78-0.80; heat pump/air conditioner: SEER 10-11.5, HSPF 6.8-7.2. High efficiency fuel fired furnace: AFUE 0.90 or above; heat pump/air conditioner: SEER above 12, HSPF over 7.5. Because the efficiency of electric heat pumps and air conditioners are nominally over 100%, the costs of heating and cooling are less than the base cost. Also, the cost of operating fuel-fired heating systems (natural gas, propane and fuel oil) does not include the cost of electricity for operating the blowers, which can be significant.

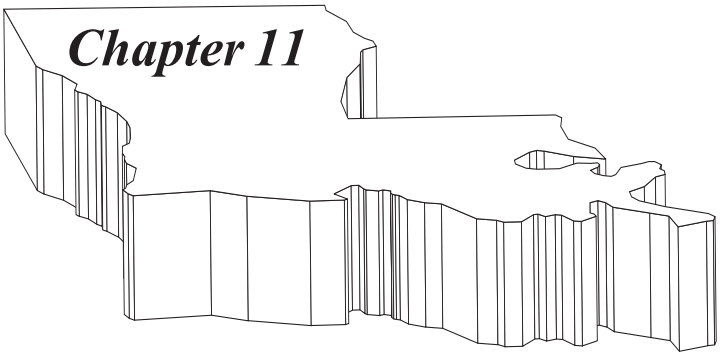

Natural Cooling

Louisiana's hot, humid summers drive most people indoors to air conditioned comfort — comfort that is paid for by high monthly cooling bills. Homeowners that use energy efficient options—properly installed insulation and HVAC systems with aggressive air sealing and duct sealing—will have lower summer cooling bills.

Design ideas known as natural cooling measures can further reduce the air conditioning needs of any house. Natural cooling guidelines are especially important for passive solar homes because their large expanses of south-facing glass can cause overheating if unprotected in summer.

In Louisiana, summer discomfort is caused by humidity as well as heat. Natural cooling techniques and new approaches designed to reduce humidity levels can promote comfort on moderately warm days. However, even in well designed homes, air conditioning will be needed to maintain comfort on the hottest days. Regardless, natural cooling techniques will continue to save money by reducing the amount of air conditioning required.

Window Shading Options

The effectiveness of different window shading options depends on the composition of the incoming sunlight. Sunlight reaches the home in three forms: *direct, diffuse*, and *ground reflected*. On a clear day, most sunlight is direct, traveling as a beam from the sun to a home's windows without obstruction. Figure 11-1 shows that most of the direct sunlight striking windows in winter is transmitted. However, in summer, sunlight hits south

Figure 11-1
Composition of Solar Gain into Home

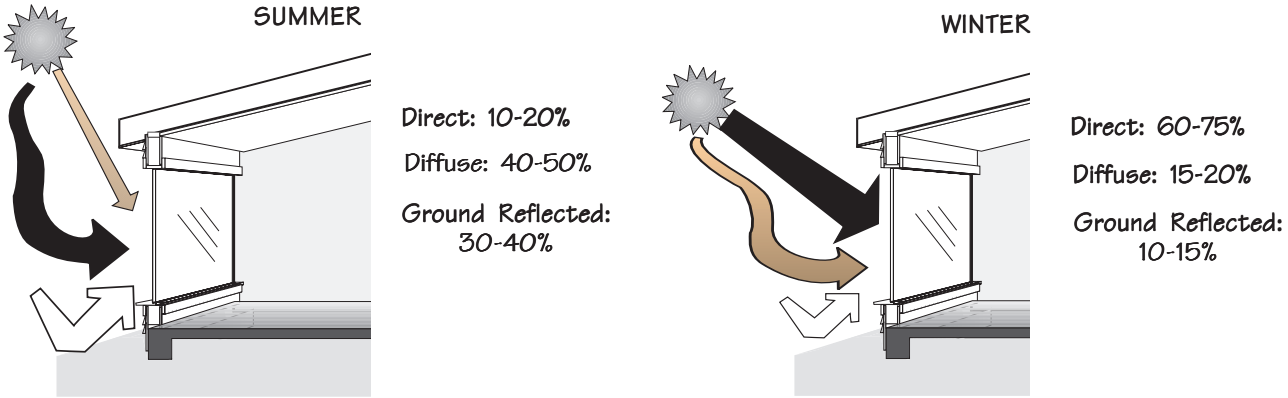

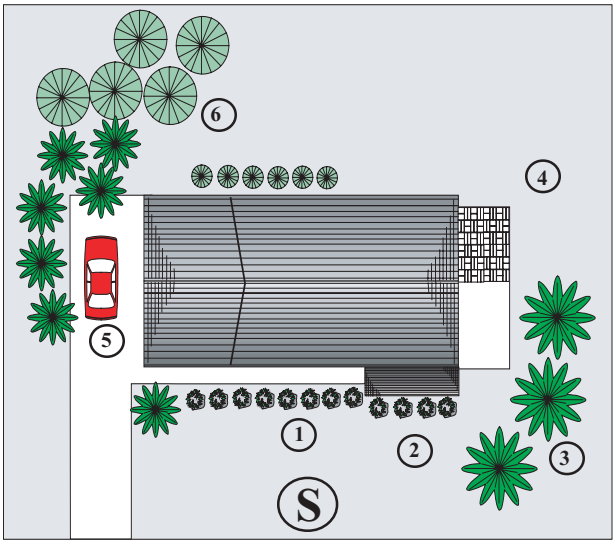

Figure 11-2
Landscaping Guidelines

1. Major glass areas are oriented within 20 degrees of south and have overhangs for summer shading.
2. Ground cover reduces reflected sunlight.
3. Deciduous trees shade east, west, southeast, and southwest sides in summer.
4. Trellis with deciduous vine shades east wall.
5. Garage on west blocks summer sun and winter winds.
6. Windbreak of evergreen trees and shrubs to the north buffers winter winds.

windows at a steep angle, and much of the direct sunlight is reflected.

The majority of the sunlight entering south-facing windows in the summer is either diffuse — bounced between the particles in the sky until it arrives as a bright haze — or is reflected off the ground. In developing a strategy for effectively shading windows, consider both direct and indirect sources of sunlight. Overhangs, long thought to be totally effective for shading south-facing windows, are best at blocking direct sunlight and are therefore only a partial solution. Other shading options include landscaping and trees, awnings, exterior and interior shades, and window films.

Landscaping and Trees

According to the U.S. Department of Energy report, "Landscaping for Energy Efficiency" (DOE/GO-10095-046), careful landscaping can save up to 25% of a household's energy consumption for heating and cooling. Trees and vines are very effective means of shading in the summer months as well as providing protection from cool winter winds. In addition to contributing shade, landscape features combined with a lawn or other ground cover can reduce air temperatures as much as 9°F in the surrounding area when water evaporates from vegetation and cools the surrounding air.

Louisiana's abundant trees are wonderful for natural shading and cooling. However, as shown in Figure 11-2, in the northern areas of the state they must be located so as to provide shade in summer and not block the winter sun coming from the south. Even deciduous trees that lose their leaves during cold weather block some

Figure 11-3
Guidelines for Overhangs

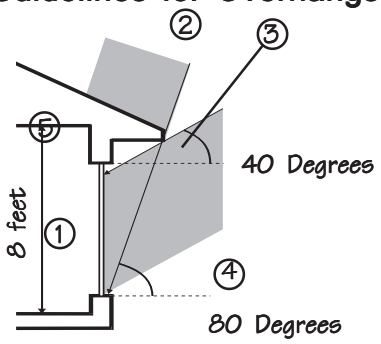

Size south overhangs using the diagram above and these rules:

1. Draw the wall to be shaded to scale.
2. Draw the summer sun angle upward from the bottom of the glazing.
3. Extend the overhang until it intersects the summer sun angle line.
4. Draw the line at the winter sun angle from the bottom edge of the overhang to the wall.
5. Use a solid wall above the line where the winter sun hits. The portion of the wall below that line should be glazed.

Summer and Winter Sun Angles
(Degrees from horizon at noon)

	July 21	January 21
Alexandria	78.5	38.5
Baton Rouge	79.5	39.5
New Orleans	80.0	40.0
Shreveport	77.5	37.5

Figure 11-4
Overhang Design Strategies

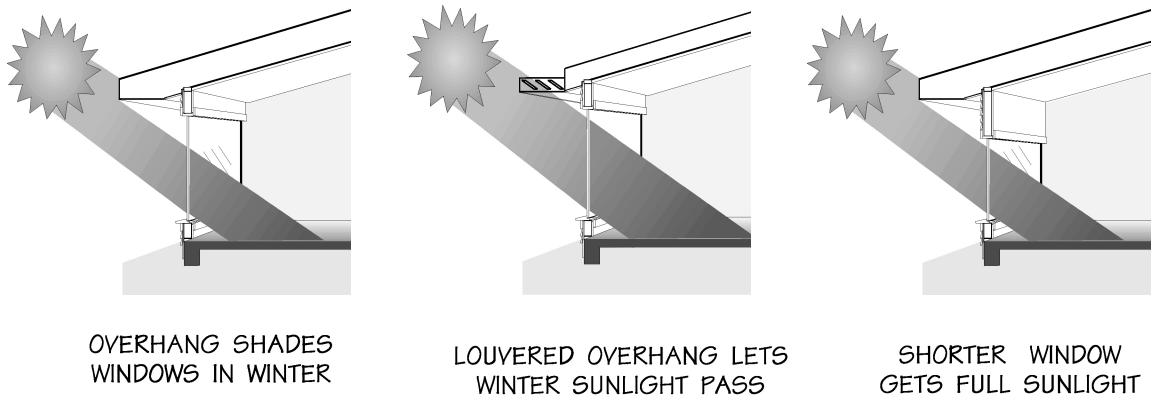

winter sunlight — a few bare trees can block over 50 percent of the available solar energy.

Overhangs

Overhangs shade direct sunlight on windows facing within about 30 degrees of south. Overhangs on east and west windows are ineffective unless they extend out horizontally as far as the window is high.

Overhangs above south-facing windows should provide complete shade for the glazing in midsummer — around July 21 — yet still allow access to winter sunlight. For a standard 8-foot wall with windows, the overhang should be 2 to 2 1/2 feet in length. The window should not extend all the way up to the bottom of the overhang; otherwise, the top of the glazing will be shaded in winter. Figure 11-3 on Page 160 shows how to size overhangs for south-facing windows.

Retractable awnings allow full winter sunlight, yet provide effective summer shading. They should have open sides or vents to prevent accumulation of hot air underneath. Awnings may be more expensive than other shading options, but they serve also as an attractive design feature.

Table 11-1
Economic Analysis of Shading Measures*

Type of Treatment	Energy Savings ($/yr)	Additional Installation Costs ($)	Rate of Return (%)	Extra Annual Mortgage Costs ($)
Some shading (1-foot overhang)	68	300	25%	24
Substantial shading (2-foot overhang, effective blinds)	134	600	24%	48
Complete shading (louvered shutters)	202	900	24%	72

* Compared to a 2,000-square-foot home with no shading measures in Baton Rouge, with 75 square feet of windows on each exposure of the home.

Figure 11-5
Interior Shading and Shutters

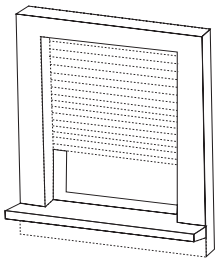

Venetian Blinds

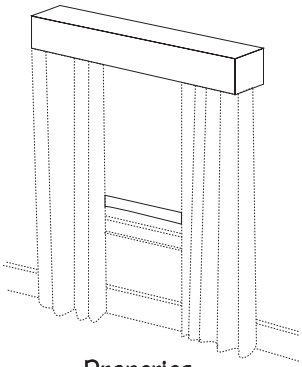

Draperies

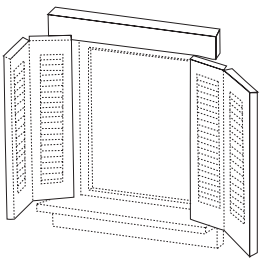

Shutters

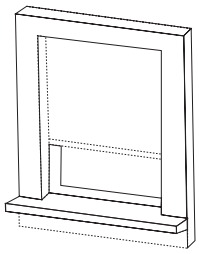

Roll-Down Shades

External Shades and Shutters

Exterior window shading treatments are effective cooling measures because they block both direct and indirect sunlight outside of the home. Solar shade screens are an excellent exterior shading product with a thick weave that blocks up to 70 percent of all incoming sunlight. The screens absorb sunlight so they should be used on the exterior of the windows. From outside, they look slightly darker than regular screening, but from the inside many people do not detect a difference. Most products also serve as insect screening and come in several colors. They should be removed in winter to allow full sunlight through the windows. More expensive alternatives to the fiberglass shade screen are thin, louvered metal screens that block sunlight, but still allow a view from inside to outside.

Hinged decorative exterior shutters which close over the windows are also excellent shading options. However, they obscure the view, block daylight completely, may be expensive, are subject to wear and tear and may be difficult for many households to operate on a daily basis. They work best in hot, sunny climates, when they can be closed for weeks at a time.

Interior Shades and Shutters

Shutters and shades located inside the house include curtains, roll-down shades, and Venetian blinds. More sophisticated devices such as shades that slide over the windows on a track and interior movable insulation are also available. Figure 11-5 pictures several interior shading devices.

Interior shutters and shades are generally the least effective shading measures because they try to block sunlight that has already entered the room. However, if passive solar windows do not have exterior shading, use interior measures. The most effective interior treatments are solid shades with a reflective surface facing outside. In fact, simple white roller blinds keep the house cooler than more expensive louvered blinds, which do not provide a solid surface and allow trapped heat to migrate between the blinds into the house.

Table 11-2
Shading Design Strategies

Window Direction	Landscaping	Overhangs	Shade Screens	Interior Shades	Recommended Strategies
South	Even deciduous trees shade some in winter. Provide a few high branching trees. Use shrubs and ground cover to reduce sunlight reflected into windows from the ground.	They do not shade diffuse sunlight on hazy days and ground- reflected sunlight, two of the most important sources of summer solar heat gain.	Block up to 70% of sunlight before it gets through window. Can be very effective.	Can eliminate over 40% of solar gains. Should be used on all windows without exterior shade screens. Roller blinds are more effective than Venetian blinds.	Shrubs & ground cover. 1-1/2 to 2-1/2 foot overhang that does not block winter sunlight. Also use shade screens or interior shades.
Southeast & Southwest	High branching trees are appropriate near southeast and southwest corners of house.	Even less effective than on south windows.	Effective.	Effective.	High branching trees. Shrubs and ground cover. Also use shade screens or interior shades.
East & West; Northeast & Northwest	Low branching trees block low morning and afternoon sun. Shrubs next to the house are less effective, but shade ground-reflected sunlight.	Must be as long as the window is tall (e.g. porches and carports) or use awnings that extend over windows.	Effective.	Effective.	Low branching trees. Ground cover. Also use shade screens or interior shades.
North	Evergreen trees provide summer shading (north windows do get some summer sun) and serve as a wind break.	Ineffective.	Effective if incoming sunlight is a problem.	Can help control the small amount of incoming sunlight.	Evergreen trees. Also consider interior shades.

Table 11-3
Solar Heat Gain Coefficients for Window Coverings

Type of Covering	Shading Coefficient*
None	0.88
Medium-colored venetian blinds	0.57
Opaque dark shades	0.60
Opaque white shades	0.25
Translucent light shades	0.37
Open weave dark draperies	0.62
Close weave light draperies	0.45

*Lower numbers shade better. The table assumes windows are double-glazed. Source: ASHRAE Handbook of Fundamentals, 1985.

Reflective Films and Tints

Reflective film, which adheres to glass and is found often in commercial buildings, can block up to 85% of incoming sunlight. The film blocks sunlight all year, so it is inappropriate on south windows in passive solar homes. However, it may be practical for unshaded east

Figure 11-6
Reflective Window Film

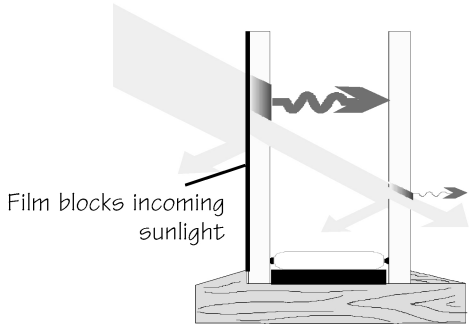

and west windows. These films are not recommended for windows that experience partial shading because they absorb sunlight and heat the glass unevenly. The uneven heating of windows may break the glass or ruin the seal between double-glazed units.

The installed cost of reflective films ranges from $1 to $4 per square foot. Price should not be the sole criterion when selecting an installer — quality is a vital consideration affecting the appearance of the house and the beauty of the view to the outside.

Most window manufacturers offer tinted windows, which can have Solar Heat Gain Coefficients under 0.30. The window tints add color, such as green, amber, rose, blue, or a reflective finish to the window. These tints are often inexpensive, costing only $3 to 10 extra per window for many units. However, the tint is permanent, so incoming sunlight will be blocked in both summer and winter.

VENTILATION

Cooling ventilation measures not only help improve comfort, but also bring in fresh air. Air movement increases comfort by evaporating moisture from the skin. Research has shown that people feel as comfortable in rooms at 85°F with air movement as in rooms at 75°F with still air. Both natural ventilation and mechanical ventilation measures can be important for low cost cooling.

Natural Ventilation

Summer breezes can generate air movement inside the house. All rooms used frequently should be designed for ventilation from the wind; however, natural breezes are unpredictable throughout most of Louisiana. They usually do not blow from any one direction reliably in spring, summer, or fall and are not very strong. Do not rely on the wind as the only source of air movement.

Another form of natural ventilation is called the *stack effect*. As shown in Figure 11-8, hot air can exit the house through a high opening. A low opening lets in outside air to replace the exiting air. The stack effect is also not a reliable form of ventilation, particularly on hot days when the outside air drawn into the house is uncomfortable.

However, the stack effect can keep rooms with high ceilings more comfortable than today's standard homes

Figure 11-7
Natural Ventilation Design Strategies

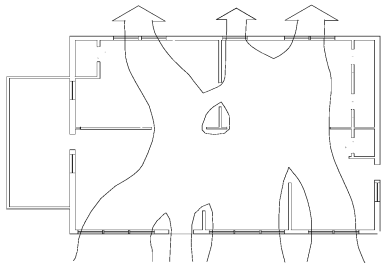

North or South Wind

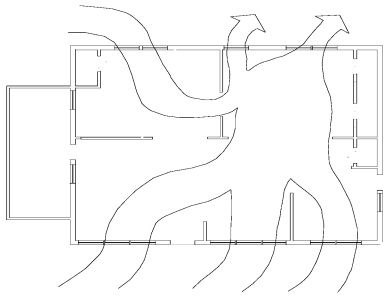

East or West Wind

Figure 11-8
The Stack Effect

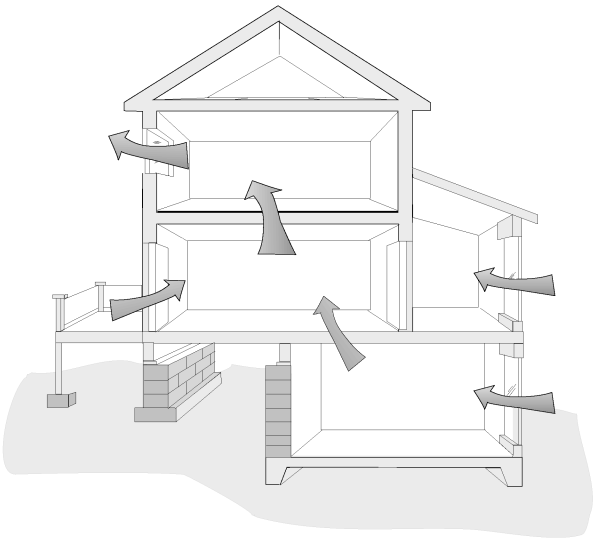

Table 11-5
Comparative Power and Operating Costs of Cooling Equipment

Type of Equipment	Air Flow (cfm)	Typical Electricity Cost (¢/hour @ 8¢/kwh)
Portable fan	1,500 - 2,500	0.5
Ceiling fan	1,000 - 7,000	2.0
Whole house fan	3,000 - 12,000	3.0
Room air conditioner	n/a	16.0
Central air conditioner	n/a	29.0

with 8-foot ceilings. In rooms with 10- or 12-foot ceilings, air temperatures near the floor may be 5 to 10 degrees cooler than those near the ceiling.

Mechanical Ventilation

Mechanical ventilation—using fans or blowers—provides an inexpensive means of creating a cooling air flow. Air movement across the skin causes more rapid evaporation and consequent cooling.

Internal air movement created by portable fans or ceiling fans can provide comfort inexpensively. Use interior fans even when the air conditioning is operating. For each degree that the thermostat is raised, air conditioning costs drop 3 to 8 percent. By setting the thermostat between 80 and 85°F and using fans that blow directly on room occupants, homeowners can save 20 to 50 percent on cooling bills. Sizing rules for ceiling fans are shown in Table 11-4.

Whole house fans, also called attic fans, blow hot room air from inside up into the attic and pull supply air into the home from outside. Table 11-5 shows that whole house fans are more powerful than ceiling fans, but are still economical to operate.

The primary disadvantage of whole house fans is that they bring in outside air containing moisture, dust, and, at times, pollen and other allergens. However, for most people, whole house fans can save on cooling bills, especially in spring, early summer, and fall. In fact, many homes without air conditioning rely solely on whole house fans to maintain comfort.

Guidelines for sizing whole house fans are summarized in Table 11-6. They can be coupled with ceiling fans to reduce cooling costs 30 to 60 percent as follows:

- ❒ When it is hotter than 85°F outside, set the air conditioner thermostat at 85°F and run ceiling and portable fans
- ❒ When it is cooler than 85°F outside and not excessively humid, turn the air conditioner off, open windows, and run the whole house fan It is best to operate the air conditioning system during

Table 11-4
Sizing Rules for Ceiling Fans

Largest Room Dimension	Minimum Fan Blade Diameter (inches)
12 feet or less	36
12 to 16 feet	48
16 to 17-1/2	52
17-1/2 to 18-1/2	56
18-1/2 or more feet	2 fans

Table 11-6
Sizing Rules for Whole House Fans

Size of House (sq ft)	Size of Fan Needed (cfm)
1,000	4,000 - 8,000
1,500	6,000 - 12,000
2,000	8,000 - 16,000

*The fan should provide 0.5 to 1 air change per minute, This means the volume of air in the house is blown outside one to two times every two minutes; a 2,000 sq ft house with 8-foot ceilings has a volume of 16,000 cubic feet, so it requires a whole house fan that can move 8,000 to 16,000 cubic feet of air per minute (cfm).

Figure 11-9
Whole House Fans in Leaky Homes

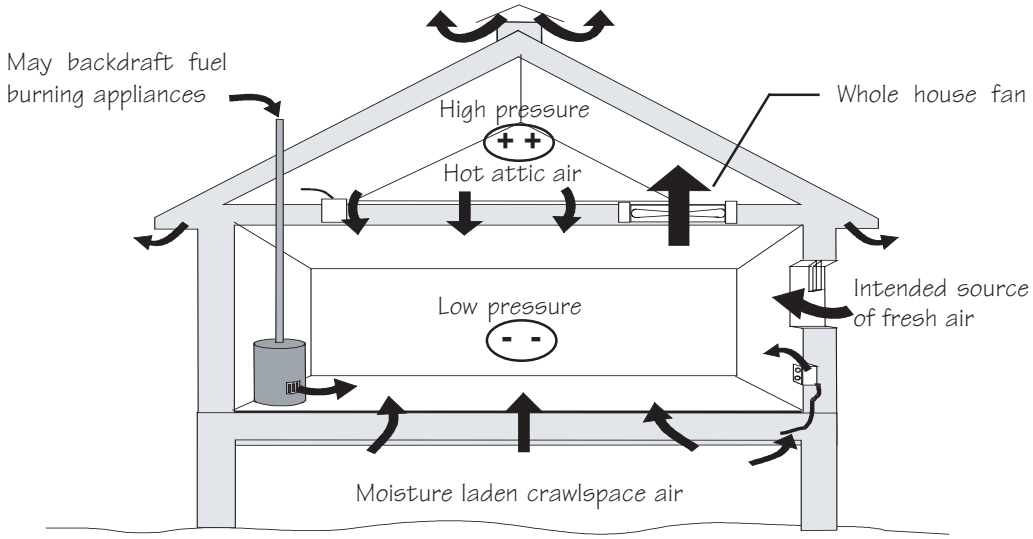

humid weather to provide dehumidification. A central dehumidification system, discussed later, could also be considered

- ❒ On days when temperatures do not rise above 85°F until mid or late afternoon, try ventilating during the cooler morning hours. As temperatures increase, close windows and pull shades to keep the heat outside. Use interior fans to create a breeze. As temperatures cool in the evening, open the house and ventilate

Whole house fans are primarily recommended for houses without air conditioning or for homes whose occupants are committed to saving energy and are willing to operate their home carefully.

Homes that use whole house fans, such as the example in Figure 11-9, need several other features:

- ❒ Adequate attic ventilation to exhaust the large volumes of air blown into the attic effectively
- ❒ A well sealed pressure boundary between the crawlspace, home, and the attic. If there is air leakage between the home and the attic, the consequences can be severe. The attic air and damp crawlspace or basement air will leak into the home, increasing temperature and humidity and decreasing comfort
- ❒ No combustion appliances that operate when the whole house fan is turned on should be inside the pressure boundary or backdrafting may occur. Negative impacts could include carbon monoxide entering the home or flame rollout — where the outside air being drawn down the flue pushes the flame for the appliance into the room

Radiant Heat Barriers

On a sunny summer day, the temperature of a home's roof can climb above 160°F. As the roof gets hot, its heat moves across the attic air space in the form of long-wave radiation. When this heat strikes the attic insulation, it warms the top surface and causes more heat to be conducted into the house, thus driving up cooling bills. Much of this radiant heat can be blocked using reflective materials called *radiant heat barriers.*

Figure 11-10
Radiant Heat Barrier

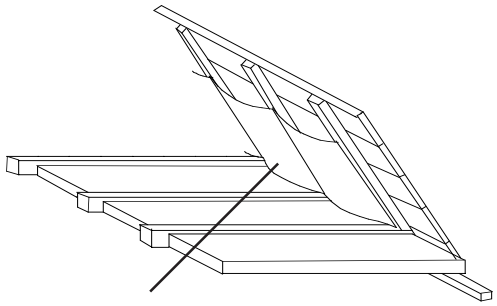

Radiant barriers work in two ways. They reflect the radiation that strikes their surface, and they do not readily emit heat. To be effective, the shiny side must face an air space and the air space should be vented to the outside. Continuous ridge and soffit vents usually provide enough ventilation.

Some roofing manufacturers and builders have expressed concern about roof temperatures being higher in homes with radiant heat barriers, thus decreasing the life of the roof deck and the shingles. According to research conducted by the Florida Solar Energy Center and Oak Ridge National Lab (ORNL), radiant heat barriers increase roof temperatures no more than 10°F.

The reflective surface must also remain dust-free. A recent study showed that after four years, the effectiveness of radiant heat barriers installed on top of the attic floor insulation had declined about 50% due to dust accumulation. Therefore, a radiant barrier should be installed with its shiny side facing down to minimize lowered effectiveness due to dust settling on its surface. Generally, radiant barriers are stapled to the underside of the rafters in an attic. While they can be placed on top of the attic floor insulation, most experts feel that dust will accumulate on the reflective surface at this location.

According to research conducted in the southeastern United States, radiant heat barriers can reduce cooling costs 5 to 20 percent for some homes. Actual savings depend on many factors, including climatic conditions, the amount of roof shading, the level of attic insulation and ventilation, and the location of the radiant barrier.

Table 11-7
Radiant Heat Barrier (RHB) Performance

Construction	Annual Energy Bills	
	Heating	Cooling
Attic Applications		
Standard R-11, no RHB	$396	$553
Standard R-19, no RHB	372	531
Standard R-30, no RHB	359	519
RHB with R-11	396	519
RHB with R-19	372	507
RHB with R-30	359	503

Modeled for a 2,000 sq ft attic in Baton Rouge, LA using REM-Rate version 8.3 software.

The different radiant heat barrier products available (even those with air bubbles or several layers of foil) vary little in performance.

Radiant heat barriers are never a substitute for insulation. Ceiling insulating values of at least R-19 are recommended before considering radiant heat barriers. These products have been oversold by zealous sales personnel who have made misleading claims. Prices vary substantially — from under $0.10 per square foot to over $0.70 — so shop wisely.

Multiple layers of radiant barrier material are not generally cost effective. The first barrier surface eliminates about 95% of the radiant heat transfer across the attic. Adding more can affect only 95% of the remaining 5%.

Reflective barriers are recommended in east and west walls by the Florida Solar Energy Center in southern Louisiana. The walls should be unvented and located in climates with very low demand for heating in winter. Multiple layers of barrier materials work better in walls than in attics.

Reflective Roof Coatings

An additional way to reduce attic and roof temperatures is through reflective roof coatings. Traditional dark or medium colored roofing materials can absorb 70% to 90% of the sunlight that strikes them. Light-colored coatings applied to the surface of your roof can reduce this absorption up to 60% as well as provide additional waterproofing. Field tests on various roof types performed by the Florida Solar Energy Center indicate savings on cooling bills of 19% on average.

White coatings are the most effective due to their superior reflective and re-emitting properties and are available at many local building supply outlets. The most effective locations for reflective coatings are roofs with lower insulation levels that receive harsh sunlight.

Due to the relatively high cost of materials ($0.06 - $0.12 per square foot), coatings are most economical if applied to new homes or when replacing an existing roof . When the coating is applied to a fresh roof, the homeowner can take full advantage of its reflective, waterproofing, and roof preservation qualities over the entire life of the roof. If care is taken to keep the coating free of dirt and algae stains, degradation of the reflective qualities will be minimal, but if unattended, substantial degradation can occur.

MOISTURE CONTROL

Energy efficient homes in Louisiana have a substantial need for dehumidification. In warm and hot weather, 20% to 40% of the energy used by the air conditioning system goes to remove moisture. By using moisture control strategies during construction (see Chapter 1 for a set of drawings which include moisture control tips and Chapter 2 for moisture control concepts), you can reduce the dehumidification load.

There are mechanical devices whose goal is to dehumidify the air. They can often make homes comfortable at relatively warm indoor temperatures. While not a full substitute for air conditioning, the following systems can often reduce cooling bills:

Central Dehumidification Systems

Several manufacturers are marketing central dehumidification systems designed to provide comfort during warm weather. In hot weather, they can supplement the central air conditioning system and allow comfort at higher indoor thermostat settings.

A schematic for a typical system is shown in Figure 11-11. The system can be controlled by a dehumidistat, which senses the relative humidity of the room in which it is located. While not a substitute for air conditioning in most of Louisiana, dehumidification systems can provide comfort during much of the year, work well in conjunction with central cooling systems, and may handle all of the summer comfort needs in downstairs rooms that are well insulated and have limited window area.

Desiccant Cooling Systems

Considerable research has investigated different approaches for using these materials which absorb moisture from the air to reduce cooling loads. Desiccants such as Lithium Chloride (LiCl) or Silica gel have a high attraction for water vapor, making them excellent materials for removing moisture from humid air. As shown in Figure 11-12, some desiccant systems have a ceramic wheel impregnated with the desiccant material. The incoming airstream gives up its moisture to the desiccant and continues on to the air conditioner to be cooled.

Figure 11-11
Central Dehumidification System

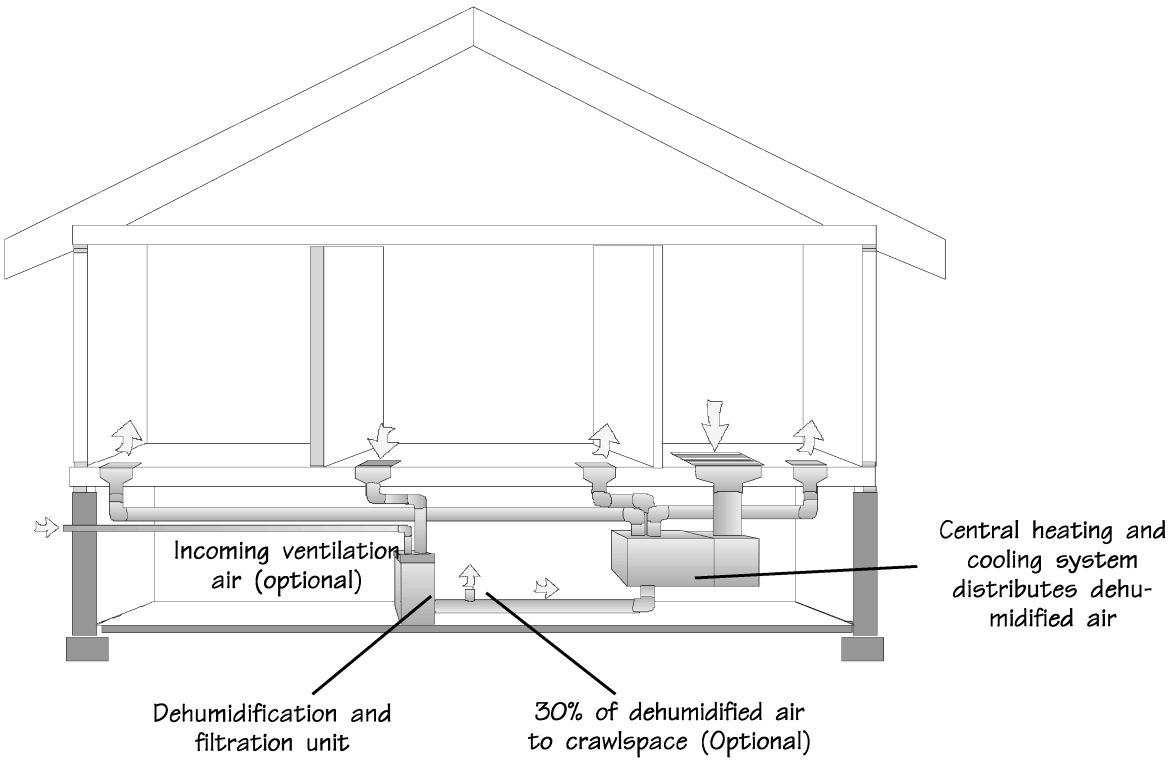

The humidity-laden wheel rotates into a smaller airstream where it releases its moisture to air that has been heated by either solar energy, waste heat, or gas. In this way the desiccant is continuously regenerated (dried), with dry desiccant always moving into the process airstream. Other systems use liquid desiccants instead of a desiccant wheel to remove moisture, but utilize similar methods to regenerate the desiccant material. According to some estimates, desiccant cooling could reduce a building's total electricity demand by as much as 25% .

There are additional benefits of desiccant systems. They may allow HVAC contractors to reduce compressor size due to reduced latent cooling loads and will improve indoor air quality by maintaining a lower ambient relative humidity.

Figure 11-12
Desiccant Wheel Dehumidifier

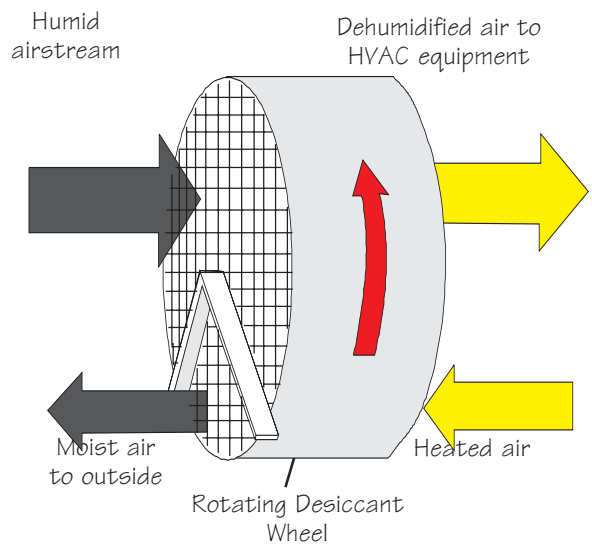

ALTERNATIVE COOLING OPTIONS

In addition to ventilation and shading, numerous other options have been considered to help provide comfort in summer. These alternative cooling techniques reduce temperatures by transferring heat and moisture to the earth or the air.

Unfortunately, the high humidity levels and warm nights that are prevalent in the South limit the effectiveness of most of these alternatives. In arid climates with hot days and cool, dry nights, such as in the southwestern United States, these measures work better. They are summarized below:

- ❒ **Evaporative Cooling** — Use evaporating water to cool surfaces such as swamp coolers or roof spray systems
- ❒ **Solar Chimneys** — Solar collectors located on the roof can generate very high air temperatures. If the hot air is allowed to rise and escape from the top of the collector, it creates a natural draft that can pull in air from the home. Thus, solar chimneys function like solar-powered whole house fans; however, they cannot pull air at high velocity, which is one of the primary cooling functions of a large, whole house fan. Most systems use 200 to 350 square feet of collector, which would cost over $2,000 — a sizable investment with no prospect for a positive rate of return
- ❒ **Earth Cooling Tubes** — A number of homes have used pipes buried several feet underground to cool outside air drawn into the home. Some designs circulate room air through a closed-loop system rather than drawing outside air. Their performance in the Southeast has been disappointing. Little cooling or dehumidification has been reported for the few systems that have been monitored. Installation of the tubes can be expensive and requires digging up the site. A 500-foot tube costing several thousand dollars may save up to $75 annually, while providing little or no dehumidification

Earth cooling tubes are not recommended as a practical natural cooling method. Geothermal heat pumps, which circulate water in tubes located below grade, are a more practical alternative.

Notes:

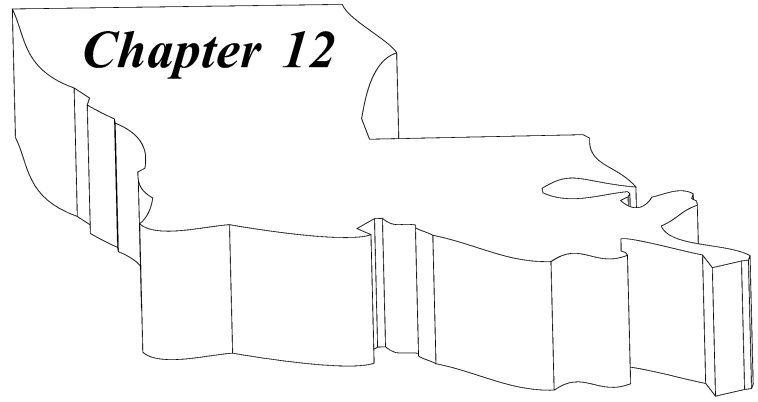

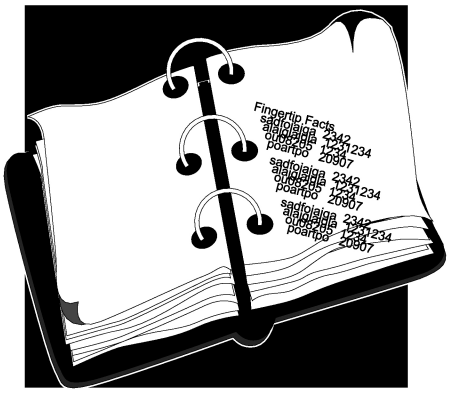

LOUISIANA DEPARTMENT OF NATURAL RESOURCES

Fingertip Facts

This factsheet contains statistical energy information—conversion factors, R-values, fuel prices, energy efficiency recommendations, and climatic data for Louisiana. It serves as a reference guide for those seeking a quick answer to an energy question.

Abbreviations

Btu	British Thermal Unit, the amount of heat needed to increase the temperature of one pound of water one degree Fahrenheit (about the amount of heat released when a kitchen match burns)
1° F	one degree Fahrenheit
MMBtu	million Btu
kwh	kilowatt-hour
KW	kilowatt
cf	cubic foot
cfm	cubic foot per minute
bbl	barrel
gal	gallon

Energy and Fuel Data

Energy Units

1 kwh = 3,412 Btu
1 MMBtu = 293 kwh
1 Btu = 252 calories
1 Btu = 1,055 joules

Power Units

1 watt = 3,412 Btu/hour
1 kw = 3.412 MMBtu/hour
1 horsepower = 746 watts
1 ton of heating/cooling = 12,000 Btu/hour

Fuel Units

1 cf of natural gas = 1,000 Btu
1 therm = 100,000 Btu
1 bbl fuel oil = 42 gallons
1 bbl fuel oil = 5.8 MMBtu
1 ton fuel oil = 6.8 bbl
1 gallon fuel oil = 136,000 Btu
1 gallon propane = 91,500 Btu
1 ton bituminous (Eastern) coal = 21–26 MMBtu
1 ton subbituminous (Western) coal = 14–18 MMBtu
1 cord wood = 128 cubic feet (4 ft x 4 ft x 8 ft)
1 cord dried oak = 23.9 MMBtu
1 cord dried pine = 14.2 MMBtu

Average Daily Solar Radiation

(Btu/sq ft on a Vertical, South-Facing Surface)

	Latitude	January	July
Baton Rouge	30.5	889	786
Lake Charles	30.1	790	795
New Orleans	30.0	950	801
Shreveport	32.5	920	864

Insulating Values

The R-value is the measure of resistance to heat flow via conduction. R-values vary according to specific materials and installation.

Insulation	R-value per inch
Fiberglass batts/rolls	3.1 to 4.3
Fiberglass loose-fill	2.2 to 2.6
Rock wool loose-fill	2.6
Cellulose	3.7
Vermiculite	2.1
Perlite	3.3

Rigid Insulation Boards	R-value per inch
Fiberboard sheathing (noninsulating blackboard)	2.6
Expanded polystyrene (beadboard)	4.0
Extruded polystyrene	5.0
Polyisocyanurate and polyurethane	6.8 to 7.2

Building Materials	R-value per inch
Drywall	0.9
Wood siding	0.9 to 1.2
Common brick	0.2
Lumber and siding	
Hardwood	0.8 to 0.94
Softwood	0.9 to 1.5
Plywood	1.3
Particle Board (medium density)	1.1
Asbestos-cement (entire shingle)	0.21
Concrete block (entire block)	
Unfilled	0.4 to 1.2
Filled with vermiculite/perlite	1.3 to 2.0
Filled with cement mortar	.2

Dead Air Spaces	R-value of air space
1/2-inch	0.75
3/4-inch	0.77
3–1/2-inch	0.80
3–1/2-inch, reflecting surface on one side	1.6
3–1/2-inch, reflecting surface both sides	2.2

HVAC Equipment Efficiencies

Annual Fuel Utilization Efficiency (AFUE) shows the average annual efficiency at which fuel-burning or electric resistance furnaces operate.

Coefficient of Performance (COP) measures how many units of heating or cooling are delivered for every unit of electricity used in a heat pump or air conditioner.

Heating Season Performance Factor (HSPF) measures the average number of Btu of heating delivered for every watt-hour of electricity used by a heat pump.

Seasonal Energy Efficiency Ratio (SEER) measures how readily air conditioners convert electricity into cooling—a SEER of 10 means the unit provides 10,000 Btu's of cooling per kilowatt-hour of electricity.

Ranges of Efficiency	Low	Moderate	High
Gas furnaces (AFUE)	0.78	0.80	0.95
Air conditioning (SEER)	10	12	15
Heat Pump (HSPF)	6.8	7.2	8.0

Climatic Data for Louisiana

Heating Degree Days (HDD) are a measure of how cold a location is in winter.

Winter and Summer Design Temperatures should be used by heating and cooling contractors when sizing heating and cooling systems. They show the temperatures that are exceeded in summer or dipped below in winter only 2.5% of the time.

Equivalent Full Load Compressor Hours (EFLCH) add up the total minutes a typical air conditioner would operate per year and divide by 60 minutes per hour.

Location	Winter Design Temp	HDD	Summer Design Temp	EFLCH
New Orleans	33	1,400	92	1,880
Lake Charles	31	1,490	93	1,820
Lafeyette	30	1,550	94	1,760
Baton Rouge	29	1,610	93	1,730
Alexandria	27	2,000	94	1,560
Shreveport	25	2,160	96	1,500
Monroe	25	2,310	96	1,450

Average Monthly Temperatures

	Baton Rouge	Lake Charles	New Orleans	Shreveport
JAN	51	52	53	47
FEB	54	55	56	51
MAR	60	60	61	57
APR	68	69	69	66
MAY	75	75	75	73
JUN	80	81	80	80
JUL	82	82	82	83
AUG	82	82	82	83
SEP	78	78	78	77
OCT	69	70	70	68
NOV	59	60	60	56
DEC	53	54	55	49
YEAR	67	68	68	66

Comparative Climatic Data

	Average Temperature	Heating Degree Days*	Equivalent Full Load Compressor Hours*
Honolulu, HI	77	0	3,510
Miami, FL	76	200	2,940
Brownsville, TX	74	600	2,590
Houston, TX	69	1,410	1,880
Mobile, AL	67	1,620	1,620
Tucson, AZ	68	1,700	1,720
Jackson, MS	65	2,260	1,470
Birmingham, AL	62	2,710	1,340
Atlanta, GA	61	2,990	1,170
Memphis, TN	62	3,210	1,300
New York, NY	55	4,880	770
Washington, DC	54	5,010	900
Chicago, IL	51	6,640	650
Glasgow, MT	42	9,000	500
Fargo, ND	41	9,250	490
Caribou, ME	39	9,770	300
International Falls, MN	37	10,600	370
Fairbanks, AK	20	14,290	190

* See Page 172 for a definition of these terms

Notes:

Index

A

Air Source Heat Pumps 105
Air Barrier 3, 11, 47, 52, 89
Air Barrier System 2, 41, 50
Air Conditioners 104, 105, 106
Air Conditioning 101
Air flow 103
Air Handler Cabinets 16
Air Leakage 8, 11, 19-20, 39, 44, 45, 48, 50, 51, 114
Air Leakage Sealing 47
Air Movement 33–39
Air Quality 33, 33–39
Air-handling Unit 104
Air-Source Heat Pump 107
Airtight Construction 46
Airtight Drywall Approach 54, 54, 57
Airtight Drywall Gasket 42
Airtightness 49
Anchor Bolt 9
Appliances, Energy Costs for 134
Apron 91
Attic 13, 118
Attic Access Door 84
Attic Blocking 84
Attic Cover 13
Attic Hatches 4-53
Attic Pressure 83
Attic Return 118
Attic Ventilation 82–89
Attic Ventilation Fan 83
Automatic Zoned System 103
Awning 93

B

Back-up water heater 130
Baffle 29
Band Joist 9, 10, 11, 43, 55, 70, 72
Batch Solar Water Heating System 131
Batt insulation 55
Batts 76
Blower 99, 111
Blower Door Test 49
Blowing Chart for Loose-Fill Insulation 85
Blown Foam Insulation 77
Blown Loose-fill Insulation 76–81
Boots 124
Bottom Plate 70, 77
Bottom Wall Plate 55
Branch Duct 99
Btu 163
Building Envelope 11, 61
Bulk Moisture Transport 38
Bypass damper 103
Bypasses 42, 47

C

Cantilevered Floor 72
Capillary Action 39
Capillary Break 3, 4, 9
Carbon Monoxide 46
Carbon Monxide Detector 4
Casement 93
Catalytic Device 112
Cathedral Ceiling 3, 5, 88, 89
Caulk, Firestop-rated 14
Caulking 10, 79
Caulking, Heat-resistant 53
Ceiling 13
Ceiling decking 89
Ceiling Joist 13, 85
Cellulose Insulation 85
Central Dehumidification Systems 158–159
Central Exhaust Fan 116
Chases 14, 50, 52, 53
Chimney 46
Chimney Chase 53
Code 26
Collector 132
Combustion Chamber 112
Compressed Batt 76
Compressor 105
Condensate Line 99
Condensation 36, 40
Condensing Coil 104
Condensing Unit 104
Conditioned Basement 4
Conduction 34
Continuous Insulation System 2
Contractor 15
Convection 34
Convection current 92
Cooling 19–20
Cooling coil 111
Cooling Equipment 155
Cooling Equipment Selection 102
Corner Framing 74
Corner Studs 75
Cornerboard Trim 12
Crawlspace 3, 8, 71, 72
Creating Boundaries 43

D

Damper 112
Deep well Loop 107
Dehumidification 15
Dehumidification Ventilation Systems 115
Desiccant Cooling Systems 158–159
Desiccant Wheel Dehumidifier 159
Direct Gain 141
Direct vent heater 113
Dishwashers 135
Door Costs 97
Doorbell Transformer 84
Doors 97, 98
Double Stud Corner 12
Double-glazed Window 92, 94
Double-hung Windows 93
Drainage Plane 38
Draperies 154
Dropped Ceiling Soffit 52
Dropped Soffit 50
Dryers 136
Drywall clip 12
Duct Design 117, 123–124, 126
Duct Leakage 117
Duct Leaks 19-20, 44, 120, 120–124
Duct Materials 123–124
Duct Sealing 117
Duct Test 119
Duct Testing Fan 119
Ductboard 125
Ducts 4, 50
Ductwork 2, 3, 16, 48, 126
Ductwork Types 123

E

Earth Cooling Tubes 159
Eaves 86
Electric Junction Boxes 84
Electric Water Heaters 128, 129
Electrical 14
Electrical Boxes 14, 54
Electronic Windows 97
Energy Efficient Construction 1
Energy Efficient Home Packages 19, 27
Energy Efficient Homes 2
EnergyGuide Label 132
Engineered Joists 9
Envelope 54
Evaporative Cooling 159
Evergreens 6
Exhaust Fan 116
Exposed Beam 89
Exterior Finish 70
External Shades 152

F

Fan 83
Fan Control Switch 119
Fiberglass Batt Insulation 62
Filter 99
Firestop-rated Caulk 14
Five Star Plus 26, 30-31
Five Star/ Passive Solar 26
Five-Star Home 20, 28–29
Fixed Windows 93
Flashing 91
Flex Duct Takeoffs 16
Flex-duct 120, 123, 124
Floor Coverings 143
Floor Insulation 72
Floor Joists 9, 4-55
Floor Trusses 72
Flues 50, 53, 112
Fluorescent Lighting 135
Foam Blocks 68
Foam Insulation 65, 98
Foam Panel/ Snap tie Systems 68
Foam Sealant 91
Foam Sheathing 3, 13, 78, 79
Footing 7
Forced-air Systems 99
Foundation 6, 7
Foundation Drain 3, 5, 6, 8, 9
Foundation Insulation 64
Foundation Vents 69
Foundation Wall 66, 70
Framed Floor Insulation 70–71
Framed Wall 10
Framing 14
Full Width Batts 85
Furnace Equipment 109
Furring Strips 66

G

Gas Water Heaters 128
Geothermal Heat Pumps 107
Ground Cover 6
Gutter 6

H

Heat Distribution 146
Heat Transfer 34–39
Heat Exchanger 131
Heat Pump Equipment 105, 107, 108
Heat Pump Water Heaters 129
Heat Recovery Units 129
Heat Recovery Ventilator 115, 116
Heat-resistant Caulking 53
Heat/light/ventilator 84
Heating 19–20

Heating Coil 111
Heating Source 99
Heating Systems 107
Holes 11
Home Blower Door Test 49
Home Energy Packages 26
Hopper Windows 93
Hot Water Costs 2
House as a System 33
Housewrap 5, 57
Housewrap Air Barriers 57
Housewrap-Window Connection 57
Humidity 33–39, 40, 42, 99–111
HVAC 4, 15, 21–23
HVAC Sizing 100

I

ICF Insulated Concrete Form 8, 68
Icynene Foam 77
Inadequate Air Flow 106
Indoor Air Quality 113–115
Indoor coil 99
Infiltration 93
Infiltration Rates 49
Inlet Vents 114
Inset Framing 79
Instantaneous Water Heater 131
Insulated Floor 11
Insulated Sheathing 5, 65, 70
Insulating Jackets 128
Insulating Walls 76
Insulation 26, 86, 88, 162
insulation 3, 4, 10, 13, 19–20
Insulation baffles 83
Insulation Costs 63
Insulation Materials 61–80
Insulation Strategies 62–81
Integrated Space and Water Heating 111
Interior Foam Wall Insulation 66
Interior Shading 152

J

Jamb 91
Joints 9, 10
Jumper Ducts 16

K

Kitchen/bath Exhaust 84
Knee Wall 5, 61

L

Ladder 12
Landscaping 6, 152
Latent Gain Calculations 101
Leakage 49
Leaks and Sealants 50
Let-In Bracing 80
Lighting 2, 136–138
Lighting Products 139
Loose-Fill Insulation 85
Low - Emissivity Coatings 95
Low-e, Gas-Filled Windows 95
Low-E Windows 3
Lower Sash 91

M

Manual D 126
Manual D methods 16
Manual J 101
Manual J, Load Calculation 101
Manual J Techniques 15
Manual S 101
Masonry Chimney 84
Mechanical System Driven Infiltration 48
Mechanical Ventilation 155–159
Meeting rail 91
Metal chimney 84
Metal Door 98
Metal Duct 124
Metal T-bracing 80
Metal Termite Flashing 65
Metal Window Frame 94
Model Energy Code 21–23
Moisture 8, 19–20, 33–39, 36, 40
Moisture Barrier System 2
Moisture Control 158–159
Moisture Control System 38
Moisture Problems 19–20
Mold 33–39
Monolithic Slab 65
Mortgage 19–20
Mortgage Rate 24

N

National Fenestration Rating Council (NFRC) 93, 96
Natural Cooling 149
Natural Ventilation 154, 154–159

O

O.V.E. Framing 75
Odors 33–39
Optimum Value Engineering (O.V.E.) 74
Outlet Vent 114
Outside Air Inlet 116
Outside Casing 91
Overhangs 6, 150, 151

P

Parting Stop 91
Partition Wall 12

Partition Wall Framing 74
Passive Solar Design 32, 141
Passive Solar Homes 139, 147
Passive Solar Room Planning 140
Passive Solar Savings 146
Passive Solar Sunspace 141
Passive Solar Windows 141
Penetrations 11, 14, 42, 47, 54
Pier Foundations 8
Piping Penetrations 14
Plates 55
Plumbing 14
Plywood Floor 85
Plywood Sheathing 78
Polyethylene 3, 5
Polyisocyanurate 80
Polystyrene 80
Polystyrene beads 66
Powered Attic Ventilators 83
Pressure Boundary 4-47
Pressure Gauge 119
Pressure Imbalance 16
Pressure Problems 83
Pressure-treated Sill plate 9
Programmable Thermostats 103

R

R-value 93
Radiant Heat Barrier 3, 88, 89, 157–159
Radiant Heat Flow 92
Radiant Surfaces 112
Radiation 34
Radon 33
Rafters 74
Rail 91
Raised Heel Trusses 13
Raised Rafter Framing 29
Raised Top Plate 13, 31
Recessed Lamp 87
Recessed Lights 14, 53, 84
Reflective Films and Tints 153
Reflective Roof Coatings 158–159
Refrigerant 104
Refrigerant Lines 99
Registers 121
Relative Humidity (RH) 37, 69
Return Air Leaking 118
Return Duct 111, 116
Return Grille 121
Return Plenum 99, 117
Return System 44
Returns 16
Ridge 82
Ridge Vent 3, 5
Roll-Down Shades 152
Roof Decking 89
Roof Trusses 74

S

Saw Kerf 80
Seal Ducts 16
Sealant 70, 79
Sealing Air Distribution Systems 119
Sealing Bypasses 4-52
Sealing Seams 4-57
Seasonal Energy Efficiency Ratio 104
SEER Rating 104–114
Selecting an EfficientWater Heater 128
Sensible Gain 101
Shading Coefficient 93
Shading Design Strategies 153
Shading Measures 151
Shallow Trench Loop 107
Sheathing Costs 80
Shelf-Mounted Systems 122
Shrubs 6
Shutters 152
Sill 91
Sill Gasket Membrane 65
Sill plate 10, 70
Sill Sealant 10
Single Stud Corner 12
Single-glazed Windows 94
Single-hung Windows 93
Site Planning 6
Slab-on-Grade 5, 64, 64–81
Soffit Vent 3, 5, 29, 31, 82
Soffits 4
Solar Air Collector 10-141
Solar Chimneys 159
Solar Heat Gain Coefficient 93
Solar Savings Estimator 10-147
Solar Storage Tank 130
Solar Water Heaters 130
Solid Windows 97
Spot Fan 114, 116
Spray-on Systems 68
Stack Effect 48
Stairways 11
Standard Framing 75
Stool 91
Structural Insulated Panels (SIP) 77, 81
Structural System 37–39
Stud Cavity 55
Subfloor 9, 10, 70
Supply Duct 44, 111, 121
Supply Leaks 46, 118
Supply Plenum 99

T

T-brace 80
Takeoffs 122

Temperature 33–39
Temperature Controls 102
Termites 4, 5, 8, 33–39, 65
Termite Shield 9, 10, 71
Testing for Duct Leakage 119
Thermal Break 3, 94
Thermal Mass Patterns 145
Thermal Mass Surface 143
Thermal Storage Mass 142
Thermal Storage Wall 141
Three-stud Corner Detail 12
Throttling Valve 104
Top plate 79
Trees 6
Trunk Duct 99
Truss Roof 86
Truss Roof Construction 29

U

U-value 93
Unvented Fuel-Fired Heaters 113–115
Urethane 77

V

Vapor Barrier 9, 10
Vapor Diffusion 39
Venetian Blinds 154
Vent Pipes 84
Ventilation 6, 82–89, 113–115, 154–159
Ventilation Channel 89
Ventilation Ducts 109
Ventilation Plans 116
Vermiculite 66
Visible Light Transmittance 93

W

Wall Cavity 41
Wall Construction 73–81
Wall Cost 81
Wall Drainage Plane 13
Wall Framing 12
Wall Moisture 45
Wall Sheathings 78–81
Washing Machines 136
Water Heater 111, 128
Water Use 127
Water Vapor 35, 78
Waterproofing 8
Weatherstripping 53, 91
Whole House Fan 84
Wind 48
Wind Driven Infiltration 48
Window Alternatives 94
Window Anatomy 91
Window Costs 97
Windows, Energy Efficient 2
Window Installation 97
Window Insulating Values 96, 96–98
Window Options 97
Window Performance 93, 95
Window Shading 149–159
Window Spacers 94–98
Window Temperatures 96
Window Types 93
Windows 6, 21-23, 92, 92–98, 93, 95, 97, 147
Winter Heat Loss 92
Winter Heating Setting 103
Wiring Hole 79
Wood Framing 98
Wood Heating 112
Wood-Framed Roof 86

Z

Zoned HVAC Systems 103

LOUISIANA DEPARTMENT OF NATURAL RESOURCES